TOWN OF BLUFFTON
HISTORIC PRESERVATION COMMISSION

ELECTRONIC MEETING

Wednesday, October 7, 2020 6:00p.m.

This meeting can be viewed on the Town of Bluffton's Facebook page
https://www.facebook.com/TownBlufftonSC/

I. **CALL TO ORDER**

II. **ROLL CALL**

III. **NOTICE REGARDING ADJOURNMENT**
The Historic Preservation Commission will not hear new items after 9:30 p.m. unless authorized by a majority vote of the Commission Members present. Items which have not been heard before 9:30 p.m. may be continued to the next regular meeting or a special meeting date as determined by the Commission Members.

IV. **NOTICE REGARDING PUBLIC COMMENTS***
Every member of the public who is recognized to speak shall address the Chairman and in speaking, avoid disrespect to Commission, Staff, or other members of the Meeting. State your name and address when speaking for the record. **COMMENTS ARE LIMITED TO THREE (3) MINUTES.**

V. **ADOPTION OF AGENDA**

VI. **ADOPTION OF MINUTES** – September 24, 2020

VII. **PUBLIC COMMENTS FOR ITEMS NOT ON THE AGENDA***

VIII. **OLD BUSINESS**

IX. **NEW BUSINESS**

A. **Certificate of Appropriateness:** A request by James Guscio for approval of a Certificate of Appropriateness to allow the construction of a new 2 1/2 -story single family residential structure of approximately 2,430 SF located at 75 Bridge Street in the Old Town Bluffton Historic District, and zoned Neighborhood Conservation-HD. (COFA-07-20-014386)(Staff – Katie Peterson)

X. DISCUSSION

XI. ADJOURNMENT

NEXT MEETING DATE– Wednesday, November 4, 2020

* Public Comments may be submitted electronically via the Town's website at (https://bit.ly/TOBPublicComment) or by emailing your comments to the Growth Management Coordinator at dmclain@townofbluffton.com. Comments will be accepted up to 2 hours prior to the scheduled meeting start time. All comments will be read aloud for the record and will be provided to the Historic Preservation Committee.

"FOIA Compliance – Public notification of this meeting has been published and posted in compliance with the Freedom of Information Act and the Town of Bluffton policies."

In accordance with the requirements of Title II of the Americans with Disabilities Act of 1990 ("ADA"), the Town of Bluffton will not discriminate against qualified individuals with disabilities on the basis of disability in its services, programs, or activities.

EXECUTIVE SESSION - The public body may vote to go into executive session for any item identified for action on the agenda.

Any person requiring further accommodation should contact the Town of Bluffton ADA Coordinator at 843.706.4500 or adacoordinator@townofbluffton.com as soon as possible but no later than 48 hours before the scheduled event.

TOWN OF BLUFFTON HISTORIC PRESERVATION COMMISSION
Electronic Meeting

Thursday, September 24, 2020, Minutes

Present: Bruce Trimbur - Chair; Will Guenther – Vice Chair; Courtney McNeil; Elaine Gallagher Adams; and, Jesse Solomon

Absent: Michael Lovecchio

Staff: Heather Colin, Director of Growth Management; Kevin Icard, Community Development Manager; Katie Peterson, Senior Planner; Darby McLain, Growth Management Coordinator; Charlotte Moore, Principal Planner; and, Richardson LaBruce; Town Attorney

I. CALL TO ORDER

Chairman Trimbur called the meeting to order at 6:00 p.m.

II. ROLL CALL

III. NOTICE REGARDING ADJOURNMENT

The Historic Preservation Commission will not hear new items after 9:30 P.M. unless authorized by a majority vote of the Commission Members present. Items which have not been heard before 9:30 P.M. may be continued to the next regular meeting or an additional meeting date as determined by the Commission Members.

IV. NOTICE REGARDING PUBLIC COMMENTS

Every member of the public who is recognized to speak shall address the Chairman and in speaking, avoid disrespect to the Commission, Town Staff, and other members of the meeting. State your name and address when speaking for the record. **UNLESS OTHERWISE AMENDED BY THE HISTORIC PRESERVATION COMMISSION, COMMENTS ARE LIMITED TO THREE (3) MINUTES.**

V. ADOPTION OF THE AGENDA

Chairman Trimbur indicated that the order of the items on the agenda is suggested to change. Building 2 would be first (from VIII.B. to VIII.A.); followed by Building 3 (from VIII.C. to VIII.B); and, Building 1 (from VIII.A to VIII.C.).

Commissioner McNeil made a motion to adopt the suggested changes and the Thursday, September 24, 2020 Historic Preservation Commission Meeting Agenda. Commissioner Gallagher seconded the motion, all were in favor and the motion passed.

VI. PUBLIC COMMENTS FOR ITEMS NOT ON THE AGENDA

There were none.

VII. ADOPTION OF MINUTES – September 2, 2020

Commissioner Gallagher made a motion to approve the adoption of the September 2, 2020 minutes, Commissioner Solomon seconded the motion. All were in favor and the motion passed.

VIII. OLD BUSINESS

Town of Bluffton Attorney LaBruce (Town Attorney), outlined the process for conducting the meeting to help keep order and to keep a clear record.

Town Attorney indicated that the Applicant requested the review of 71 Calhoun Street buildings be limited to the motion made at the last meeting (August 5). He reminded the HPC that no vote was taken at last meeting and suggested that presentations be presented as the HPC believes necessary but suggested that Town Staff and the Applicant present information they believe is pertinent. He discussed the criteria for the review indicated that the Unified Development Ordinance (UDO) Certificate of Appropriateness (COFA) criteria must applied, including 3.18.3.B (Old Town Master Plan consistency), as well as consistency with the surrounding area. He ended by indicating that he would prepare a draft motion to assist the HPC.

Chairman Trimbur asked Committee if there were any questions regarding the various elements discussed. There were none.

Beginning at 6:15 p.m., public comments submitted prior to the meeting were read verbatim by Town Staff (Katie Peterson and Darby McLain) and are incorporated into these minutes (See Attachment).

At 6:37 p.m., Chairman Trimbur asked how many comments remained. Staff McLain indicated 10. The remainder of the comments were read and finished at 6:50 p.m.

Chairman Trimbur asked if comments would become part of the minutes. Town Attorney indicated that they would be incorporated into the record.

A. **Certificate of Appropriateness:** A request by Court Atkins Group, on behalf of the Owner, Cunningham, LLC, for approval of a Certificate of Appropriateness to allow the construction of a new mixed-use building of approximately 7,734 SF located at the northeastern corner of Bridge Street and Calhoun Street, Building 2 in the 71 Calhoun Street development, in the Old Town Bluffton Historic District and zoned Neighborhood Center – HD. (COFA-12-19-013784)(Staff – Heather Colin)

Heather Colin, Town of Bluffton Director of Growth Management (Colin), presented the information to the Commission, which is incorporated into these minutes. She indicated that she may be assisted by Town staff. She noted that there are three separate applications but that they must be discussed together and that there would be three separate motions.

The presentation was completed at 7:19 p.m.

Colin asked if there were any questions.

Chairman Trimbur asked for the August 5 motion to be shown. He asked which conditions had been addressed. Colin went through each condition.

Chairman Trimbur asked if a motion should be made for each issue as there was a lot of information. He asked the Town Attorney how it should be addressed. Town Attorney suggested that each determination and deviation should be evaluated.

Commissioner Gallagher wants clarification as to why the building is still objectionable to staff when the building appears to within the bounds of the UDO. Asked staff to explain. Colin indicated that in relation to the UDO requirements, scale is still a concern. All review criteria must be reviewed in their totality.

Chairman Trimbur asked if the Applicant should begin his presentation. The Town Attorney responded yes and explained a process that could be followed.

The Applicant, James Atkins, asked if the slide with the motion from August 5 could be shown. He explained the background and that this was the third final review. Most of the conversations revolved around mass and scale. Since the last review (August 5), ridge height was reduced. Ten (10) feet of height was removed from the building. Atkins stated that it is nearly the same square footage and width at Moonlit Lullaby building and similar in height to new buildings on Church Street. He felt that density needed to be addressed and mentioned that those buildings are similar in size but on smaller lots. Mass and scale were further reduced through various compositional approaches. It was indicated that about 30% of building is 2.5 stories. Also, he mentioned that Fripp House is a taller builder.

Chairman Trimbur asked Colin to show the building perspectives.

Atkins continued and indicated that he believed all comments have been addressed. If a greater shopfront is a concern, ground floor shutters on Bridge Street could become windows.

Chairman Trimbur asked if there anything Atkins wanted to show with the perspectives displayed. Atkins stated that the building fits into the context of Calhoun Street. Chairman Trimbur asked if there were any other perspectives that should be shown. Atkins stated that this corner (Calhoun and Bridge Street) is a Gateway into Calhoun Street. Bridge Street is a dividing line. Feels that the building is respectful of the area to the south of the property.

Chairman Trimbur asked Atkins to explain how the mass was broken up by the design and referred to the UDO requirement that structure not be under one massive roof. Atkins responded that more glazing and columns were provided.

Atkins showed how the building transitions to the "more residential" character of Bridge Street to transition to proposed Building 3 and stated that 40-50% of the building is 2.5 stories and that the rest is two (2) stories. He asked for the Commission to consider the exceptions, including a 9-foot deviation in fence height for the hood vent. He stated that he believes that height, scale and mass have been addressed and further stated that the buildings have been reduced by 10%. He added that detailing has been added to fit into context and scale and said that there are only a few examples of Main Street buildings in Old Town. He added that this project took its cue from those buildings.

Matt Cunningham, Owner and Applicant, requested to speak. Chairman Trimbur asked if it was appropriate. Town Attorney said it was the Commission's discretion.

Cunningham asked Colin to show the slide with the motion from August 5. He mentioned a letter that was provided from Town Staff regarding the August 5 motion and noted that changes had been made based on that letter. He said he believes that the project meets the requirements and it seems as if Town Staff agreed except for mass and scale. He recognized that Town Staff and his design team may see differently on mass and scale and stated that the meeting was "between the HPC and the application." He believed that additional conversation was confusing and requested to go through the motion to see how the resubmittal addressed the motion made on August 5.

Town Attorney said that questions of Applicant could be asked. Discussed the process again as how to proceed.

Colin said that she had the motion from the August 5 meeting, as well as the deviations slide if they needed to be viewed.

Commissioner Solomon asked about a staff comment regarding mass and scale. Regarding the articulation, it seems that there is nothing left for the Applicant to provide. Colin responded that she couldn't say exactly what details should be altered regarding articulation but that the building is out of scale with its surroundings.

Commissioner Gallagher asked to see the perspective of Calhoun Street that includes the Moonlit Lullaby building.

Commissioner Guenther stated that the Calhoun Street side looks good, and that the Bridge Street side is where the zoning district changes, which may be the reason for the comment.

Chairman Trimbur asked if the mural would be permitted. Staff Colin indicated that if it did not contain commercial speech, which would make it a sign, it would be permitted.

Commissioner Gallagher stated that she saw a proposal that has responded to everything that was asked. It seemed to be in scale, and she said she felt that the height is in scale, as it meets strict requirements of the UDO. The Old Town Master Plan shows that two very large buildings are shown. She expressed that she did not understand how this is not in keeping with Old Town Master Plan and stated that she felt that public comments are based on earlier iterations. She believes that that Building 2 meets the requirements of the discussion from the last HPC meeting and suggested that, perhaps, the Master Plan should be revisited.

Commissioner Solomon supported Commissioner Gallagher's comments and expressed that the larger buildings are appropriate for this lot.

Commissioner Guenther agreed with Solomon and Gallagher. He stated that it may be difficult to accept because three buildings are proposed to come online at the same time. He noted that he does not have any issue with the percentage shopfront provided and the added shutter.

Commissioner McNeil indicated that she had nothing to add at this time.

Chairman Trimbur asked to see the North perspective. He said his original sense was that the building was too large; the perspective suggests that previous concerns were addressed.

Commissioner Guenther said that previous concerns have been addressed and that the Applicant has achieved what was requested. He added that in the Master Plan, Principle 2 indicates that fostering connectivity is desirable, which the design shows. He added that the project feels like an extension of Promenade.

Commissioner Gallagher said she hoped that landscaping will be of a size that is somewhat mature.

Commissioner Solomon asked about the live oak and how that would be addressed. Atkins indicated the process for protection of the tree. Commissioner Gallagher asked to include on-going protection. Atkins explained the proposed protection and other measures that would be taken, like wheel stops.

Chairman Trimbur asked the Town Attorney for assistance with making a motion. Town Attorney said he had a draft motion but needed clarification on items and went over them with the Commission.

Staff and Applicant had no additional comments.

Town Attorney went through the conditions from the staff report and identified those he thought the Commission no longer had an issue with and those that are standard conditions. Gallagher said the standard items seemed innocuous.

Town Attorney mentioned that the deviations still needed to be addressed by the HPC and identified them, including the screening fence height of the vent hood and the percentage of colonnade on Calhoun Street.

Commissioner Guenther said the second story porch is appropriate in place of the colonnade requirement.

Town Attorney went over the remainder of the items that needed a determination or a deviation.

Commissioner Solomon asked if the UDO seemed to want more building frontage. Colin stated that this was related to the transparency.

Town Attorney indicated that he would email a draft motion for the Commission to review.

Commissioner Guenther asked about the suggestion of the rafter tails. Atkins said that he could accommodate this request and the chamfered corners. Commissioner Gallagher supported the use of exposed rafter tails.

Commissioner Gallagher mentioned that the building is modern and that trim at the base and capitols is not needed.

Commissioner Solomon asked if a fence taller than nine (9) feet been permitted in the past.

Town Attorney said Staff and Applicant have a chance to speak despite the draft motion.

Some commissioners indicated that they did not receive the email sent by the Town Attorney. Commissioners O'Neil and Solomon did not receive as Town Attorney did not have their email addresses.

Chairman Trimbur asked if staff or the Applicant had additional comments. Staff had none. The Applicant had no additional comments and added that he believed that previous comments were addressed with care.

Commissioner Gallagher made a motion to approve the COFA for Building 2 at 71 Calhoun Street, subject to and conditioned upon staff administrative review and the Applicant's full compliance with the following conditions:

1. That the Applicant provide a revised Landscape Plan that adequately addresses the preservation of the live oak on the site, including a "root preservation system."
2. That the Applicant complies with conditions 5, 6, 7, 8, 9(b), 9(c), 10 and 11, as set forth in Page 17 and Page 18 of the Staff Report, as well as additional conditions 1, 2 and 3 as set forth on Page 18 of the Staff Report.

Commissioner Gallagher also moved that massing and scale of proposed Building 2 was consistent with the Town of Bluffton UDO, and that the proposed project was consistent with the principles set forth in the Old Town Master Plan as the subject property is identified for redevelopment. Further, that massing and scale were consistent with other two and one-half story buildings within Old Town.

Commissioner Gallagher further moved that:

1. The service yard fence be permitted to exceed the maximum allowed height of six (6) feet required by the UDO so that the vent hood may be adequately screened; however, fence height shall not exceed nine (9) feet;
2. The percentage of colonnade provided on the Calhoun Street elevation, 59%, is an appropriate reduction from the 75%-100% UDO requirements as requiring strict compliance with the colonnade requirement will impact both massing and scale. The second-story bracketed porch and the gable and shed roofs meet the intent and purpose of this requirement;
3. The proposed 70% building frontage for an 86.7-foot-wide lot on Calhoun Street is appropriate although it is less than what is required by the UDO for a Main Street Building in the NCE-HD district;
4. The proposed 82% building for an 88.1-foot-wide lot on Bridge Street is appropriate although it is less than what is required by the UDO for a Main Street Building in the NCE-HD district; and,
5. The 42% transparency provided for the Bridge Street elevation is appropriate, as this allows a transition to more residential detailing.

Commissioner Solomon seconded the motion. All voted in favor of the motion and it passed.

B. **Certificate of Appropriateness:** A request by Court Atkins Group, on behalf of the Owner, Cunningham, LLC, for approval of a Certificate of Appropriateness to allow the construction of a new mixed-use building of approximately 7,625 SF located on Bridge Street, Building 3 in the 71 Calhoun Street development, in the Old Town Bluffton Historic District and zoned Neighborhood Center – HD. (COFA-12-19-0138785)(Staff –Heather Colin)

Heather Colin presented the information to the Commission, which is incorporated into these minutes. The motion from the August 5 meeting was displayed and how each item was addressed was identified.

The Applicant, James Atkins, provided an overview and explained what changes were made to the structure from the previous elevation. He stated that there is a significant landscape buffer next to the building and the Heyward House. He discussed the view of the building from the Town park and showed that balconies were added, an improved street front was created, and the service yard was reduced. The eastern buffer between the Heyward House was discussed in some detail. The site plan and photos were shown.

Staff Colin had no additional comments.

Atkins had no additional comments.

Commissioner Guenther stated that the parking lot side (rear elevation) was improved. In regard to the storefront on Bridge Street, the percentage provided by the Applicant was appropriate to allow for a transition from Calhoun Street to the Heyward House.

Commissioner Solomon agreed that the rear elevation is better.

Commissioner Gallagher agreed with the changes to the rear elevation and noted that comments had been addressed.

Commissioner O'Neill agreed with the comments and noted that it was much improved.

Chairman Trimbur said he appreciated the transition as the building approached the Heyward House.

Chairman Guenther said the portion closest to the Heyward House has the most step-down in height.

Commissioner Gallagher added that details at the column base and capitols were not necessary, since it was a modern building.

Town Attorney stated that a draft motion would be similar to the process that occurred for Building 2 and read a possible motion. Prior to emailing the draft motion to the Commission for their consideration, he asked if there should be any changes.

Commissioner Guenther made a motion to approve the COFA for Building 3 at 71 Calhoun Street, subject to and conditioned upon staff administrative review and the Applicant's full compliance with the following conditions:

1. That the Applicant complies with conditions 1 through 5, as set forth on Page 15 and Page 16 of the Staff Report, as well as conditions 1, 2 and 3 as set forth on Page 18 of the Staff Report.

Commissioner Guenther also moved that massing and scale of proposed Building 3 is consistent with the Town of Bluffton UDO, and that the proposed project is consistent with the principles set forth in the Old Town Master Plan as the subject property is identified for redevelopment. Further, massing and scale are consistent with other 2½ story buildings within Old Town.

It was further moved that:

1. Given that Bridge Street is a secondary street, the 53% transparency provided for Building 3 is appropriate, despite the minimum 75% transparency standard required by the UDO, as this allows a transition to more residential detailing.
2. That the proposed 84% building frontage is appropriate for a 95-foot wide lot on Bridge Street as it within the acceptable percentage for a Main Street Building per the UDO despite that the lot width exceeds the permissible width for a Main Street Building within the NCE-HD zoning district.

Commissioner Gallagher seconded the motion. All were in favor and the motion passed.

Prior to the discussion of Building 1, it was noted by the Town Attorney that a motion was necessary to allow the meeting to go past 9:30.

Commissioner O'Neill made the motion to approve. Commissioner Solomon seconded. All were in favor and the motion passed.

C. **Certificate of Appropriateness:** A request by Court Atkins Group, on behalf of the Owner, Cunningham, LLC, for approval of a Certificate of Appropriateness to allow the construction of a new mixed-use building of

approximately 7,500 SF located at the southeastern corner of Green Street and Calhoun Street, Building 1 in the 71 Calhoun Street development, in the Old Town Bluffton Historic District and zoned Neighborhood Center – HD. (COFA-10-19-013647)(Staff – Heather Colin)

Town staff, Heather Colin, presented the information to the Commission, which is incorporated into these minutes. The motion from the August 5 meeting was shown and how each condition was addressed was discussed.

The Applicant, James Atkins, provided highlights of the changes: the height of the center gable was lowered; the building will read like a two-story building, which caused some other changes; there is more transparency on Calhoun Street with expanded windows; and, on Green Street the windows were expanded to give the appearance of a shopfront window. He mentioned that the balcony addition would provide continuity with Building 3.

Chairman Trimbur asked about the articulation on the Calhoun Street frontage. Commissioner Gallagher stated that she believed that it was satisfactory.

Commissioner Gallagher mentioned she felt the windows on the North Elevation, which are "Chicago" windows are not appropriate and suggested that they be modified to appear as three double-hung windows. Atkins stated that it could be changed.

Commissioner Guenther agreed with window comment and noted that the Calhoun elevation is adequately articulated. He stated that he liked the consistency of the rear elevation with Building 3.

Town Attorney provided a proposed motion similar as to how Buildings 2 and 3 were addressed. He provided an overview of the motion and emailed motion to the Commission after asking if there were any changes.

Commissioner Guenther asked if the window changed, could it be approved at staff level. Colin indicated it is at the discretion of the Commission.

Atkins said he would be happy to change the window on the Northern Elevation.

No other comments were provided by the Commission.

Commissioner Guenther made a motion to approve the COFA for Building 1 at 71 Calhoun Street, subject to and conditioned upon staff administrative review and the Applicant's full compliance with the following conditions:

1. That the Applicant complies with conditions 3 through 6, as set forth on Page 15 and Page 16 of the Staff Report, as well as conditions 1, 2 and 3 as set forth on Page 17 of the Staff Report.
2. That the "Chicago" style window on the north elevation be revised to three double-hung windows.

Commissioner Guenther also moved that massing and scale of proposed Building 1 is consistent with the Town of Bluffton UDO, and that the proposed project is consistent with the principles set forth in the Old Town Master Plan as the subject property is identified for redevelopment. Further, massing and scale are consistent with other 2½ story buildings within Old Town.

It was further moved that:

1. Given that Green Street is a secondary street, the transition from 80% transparency on the Calhoun Street elevation to 29% on the Green Street elevation is appropriate despite the minimum 75% transparency standard required by the UDO.
2. That the proposed 83% building frontage is appropriate for a 95-foot wide lot on Calhoun Street as it within the acceptable percentage for a Main Street Building per the UDO despite that the lot width exceeds the permissible width for a Main Street Building within the NCE-HD zoning district.

Commissioner Gallagher seconded the motion. All were in favor and the motion passed.

Chairman Trimbur thanked staff for their work on the 71 Calhoun project.

Matt Cunningham, owner, thanked the Commission and staff for their work.

IX. DISCUSSION

There was no discussion on other matters.

X. ADJOURNMENT

Commissioner Gallagher made a motion to adjourn the September 24, 2020 Historic Preservation Commission meeting, Commissioner Guenther seconded. All were in favor and the meeting was adjourned at 10:08 p.m.

DRAFT

HISTORIC PRESERVATION COMMISSION

STAFF REPORT
Department of Growth Management

MEETING DATE:	October 7, 2020
PROJECT:	75 Bridge Street – New Construction: Single-Family Residential
APPLICANT:	James Guscio
PROJECT MANAGER:	Katie Peterson, Senior Planner

APPLICATION REQUEST: The Applicant, James Guscio, requests that the Historic Preservation Commission approve the following application:

1. **COFA-07-20-014386.** A Certificate of Appropriateness to construct a new two and a half-story single-family home of approximately 2,430 SF located at 75 Bridge Street in the Old Town Bluffton Historic District and zoned Neighborhood Conservation – HD.

INTRODUCTION: The Applicant is proposing the construction of a 2 ½ story, single-family residence located in the Old Town Bluffton Historic District. The proposed building, of approximately 2,430 SF, meets the dimensional/character requirements of the Center Hall Building Type in accordance with the allowable building types for the Neighborhood Conservation-HD (NCV-HD) zoning district, and thus must meet the spatial and placement requirements in Section 5.15.5.D of the Unified Development Ordinance (UDO).

The two and a half story main house features a side facing gable roof with an addition with under a shed roof to the rear. It has shed roofed dormers projecting to the front and rear of the structure. The finished floor height of the structure is raised approximately 8 feet from adjacent grade with an open storage area in the undercroft. The proposed building reflects the vernacular characteristics of Bluffton by integrating a variety of typical architectural forms and features such as gable and shed roofs, a full-length front porch and a raised pier foundation. Additional materials that are in keeping with the vernacular of Bluffton are tabby stucco piers with hog board skirting between, horizontal lap siding and exposed rafter tails.

This project was presented to the Historic Preservation Review Committee for conceptual review at the August 3, 2020 meeting and comments were provided to the Applicant (See Attachment 5).

HISTORIC PRESERVATION COMMISSION ACTIONS: As granted by the powers and duties set forth in Section 2.2.6.E.2, the Historic Preservation Commission has the authority to take the following actions with respect to this application:

1. Approve the application as submitted by the Applicant;
2. Approve the application with conditions; or
3. Deny the application as submitted by the applicant.

It is important to note that the intent of Section 5.15 Old Town Bluffton Historic District of the Unified Development Ordinance (UDO), is that the Section be user friendly and informative to the residents and the members of HPC and is not intended to discourage creativity or force the replication of historic models. Rather, it is to set forth a framework in which the diversity that has always characterized Bluffton can continue to grow. The Section also defines guidelines for design and materials similar to that used on structures within the Old Town, and it is the charge of the HPC to assess the interpretation of these guidelines as they pertain to applications using the established review criteria.

REVIEW CRITERIA & ANALYSIS: Town Staff and the Historic Preservation Commission are required to consider the criteria set forth in Section 3.18.3 of the UDO in assessing an application for a Certificate of Appropriateness – Historic District (HD). The applicable criteria are provided below followed by a Staff Finding(s) based upon review of the application submittals to date.

1. Section 3.18.3.B. Consistency with the principles set forth in the Old Town Master Plan.

    a. *Finding*. The application is consistent with the principles set forth in the Old Town Master Plan. The Old Town Master Plan states that, "The built environment, in particular the historic structures scattered throughout Old Town, should be protected and enhanced. While it is of great importance to save and restore historic structures, it is just as important to add to the built environment in a way that makes Old Town more complete."

    The Applicant proposes to construct a new single-family residence within the Old Town Bluffton Historic District, a locally and nationally designated historic district. The building, with the conditions met found in Item 2 of this Section, has been designed to be sympathetic to the architectural character of the neighboring historic structures, so its addition to the architectural diorama will both protect the integrity of the existing historic structures and enhance the neighborhood by adding architectural variety.

    b. *Finding*. The Old Town Master Plan initiatives also include the adoption of a form-based code that included architectural standards for structures located within the Old Town Bluffton Historic District. These standards are included in Article 5 of the Unified Development Ordinance. The new construction proposed as part of this request will be in conformance with those standards if the condition noted in Item 2 of this Section are met.

    c. *Finding*. The Old Town Master Plan initiatives also promote preservation and protection of the legacy of the Old Town Bluffton Historic District through additions to the built environment which make Old Town more complete. The addition of the proposed residential structure will add to the district and help provide completeness to the neighborhood and

overall district.

2. Section 3.18.3.C. The application must be in conformance with applicable provisions provided in Article 5, Design Standards.

   a. *Finding*. Town Staff finds that if the conditions noted below are met, the proposed addition will be in conformance with the applicable provisions provided in Article 5:

      1) Section 5.15.5.D. Neighborhood Conservation Historic District. The structure meets the dimensional/ character requirements of the Center Hall House Building Type within the NCV-HD zoning district. The Front Build-to Zone for a Center Hall House within the HCV-HD is 20'-30'. The Applicant has proposed the structure be placed approximately 75' from the front of the lot. As such, the structure must be moved forward on the lot to be within the required Front Build-to Zone.

         Exceptions to Build-to Lines may be granted by the UDO Administrator, in this case the HPC as the approval body for the Certificate of Appropriateness Application, where existing significant natural features are present, to preserve protected trees and to preserve the integrity of neighboring historic resources. Exceptions may also be granted to accommodate outdoor design features such as dining areas, open-air markets and public art features. Per the Site Plan and Landscape Plan submitted, it does not appear that there are any protected trees in front of the structure. Further, it appears that by moving the placement of the structure forward on the lot, it would allow the parking access to be from the side or rear without detriment to the existing trees on the site.

      2) Section 5.15.6.O. Skirting & Underpinning. Skirting and underpinning are permitted to be "pig board," set into the columns. While the material is permitted, an additional detail showing the configuration of the piers and hog-board is required as not enough information as provided to complete the review.

      3) Section 5.15.6.I. Windows and Doors. Window openings shall be oriented vertically, be wood, aluminum, copper, steel, vinyl, or clad wood, and may operate as single-hung, double-hung, casement, industrial or fixed frame. Provide additional information regarding the windows on the rear elevation as not enough information was provided to complete the review.

      4) Section 5.15.6.P. Cornice, Soffit, and Frieze. The size of the overhang, detailing and depth of the cornice, soffit, and frieze should be in proportion with the design of the structure. Open cornices with exposed rafter tails are a common detail to Bluffton and are finished with a simple 5/4" fascia board. Soffits should be

finished with beaded or v-groove tongue and groove. Frieze boards should project beyond the siding material. When exposed rafters are used, it is important that vented blocking be provided between the rafters. Rough sawn wood, plywood and aluminum are not permitted materials for soffit or cornice detailing. Provide a wall section showing the configuration of the cornice, soffit and frieze as not enough information as provided to complete the review.

5) Section 5.15.7.H. Garage doors shall be positioned no closer to streets, squares or parks than 20 feet behind the principal plane of the building frontage. Where space permits, garage doors shall face the side or rear, not the front. The proposed placement of the parking area is accessed through the principal plane of the structure facing the front of the lot. Access to parking in the undercroft must be revised to be accessed from the side or the rear.

3. Section 3.18.3.D. The nature and character of the surrounding area and consistency of the structure with the harmony of the surrounding neighborhood.

   Finding. Town Staff finds that nature and character of the new construction to be consistent and harmonious with that of the surrounding neighborhood. The mass and scale of the structure is appropriate for its location and the architectural detailing is sensitive to the neighboring properties.

4. Section 3.18.3.F. The historic, architectural, and aesthetic features of the structure including the extent to which its alteration or removal would be detrimental to the public interest.

   Finding. The Applicant seeks approval for the construction of a new single-family residential structure in the Old Town Bluffton Historic District. The proposed plans are sympathetic in design to the neighboring historic and non-historic resources; therefore, the structure, as proposed, will have no adverse effect on the public interest.

5. Section 3.18.3.H. The application must comply with applicable requirements in the Applications Manual.

   Finding. The application has been reviewed by Town Staff and has been determined to be complete.

STAFF RECOMMENDATION: It is the charge of the HPC to assess and interpret the standards and guidelines set forth in the UDO as they pertain to applications using the review criteria established in the UDO and to take appropriate action as granted by the powers and duties set forth in Section

2.2.6.E.2. Town Staff finds that with the conditions noted below the requirements of Section 3.18.3 of the Unified Development Ordinance have been met and recommends that the Historic Preservation Commission approve the application with the following conditions:

1. Per Section 5.15.5.D. of the UDO, the structure must be moved forward on the lot to meet the 20'-30' Front Build-Zone requirement for a Center Hall House within the NCV-HD.

2. Per Section 5.15.6.O. of the UDO, an architectural detail on the configuration of the piers and hog board infill must be provided to ensure it is set into the piers rather than affixed to the front.

3. Per Section 5..15.6.I. of the UDO, additional information for the rear elevation is required to ensure the windows on the back wall are in compliance with the standards found in this section, as they are not visible on the elevations.

4. Per Section 5.15.6.P. of the UDO, and the Applications Manual, a wall section showing the materials and configuration of the cornice, soffit and frieze must be provided to ensure compliance with the standards found in this section as not enough information was provided to complete the review.

5. Per Section 5.15.7.H. of the UDO, access to the parking in the undercroft must be revised to be on the side or rear of the structure.

ATTACHMENTS:

1. Location Map
2. Zoning Map
3. Applicant Narrative
4. Site Plan, Elevations and Landscape Plan
5. HPRC Comments

Attachment 1

Attachment 2

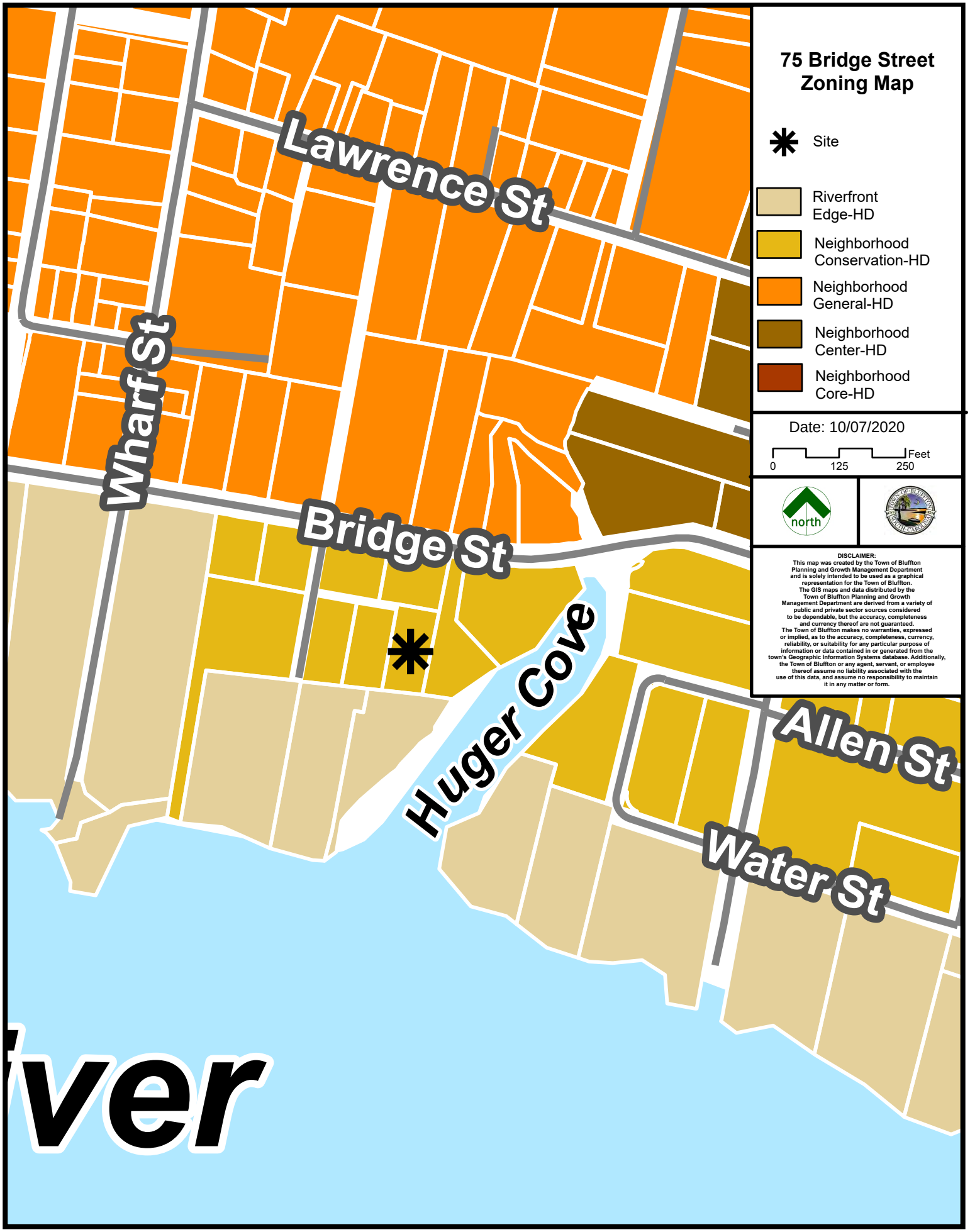

Attachment 3

Jamie & Lori Guscio
75 Bridge Street
Bluffton, SC 29910

September 3, 2020

Town of Bluffton HPRC

Just as an additional explanation of the proposed placement of the house up for consideration, we wanted to address a couple of the issues brought up in the review meeting.

1. The UDO requires that building be 10-35 feet from the front of the property line if on Bridge Street.

    1.1. This is a Non-Conforming Lot according to Chapter 7 in the UDO. As you can see from the aerials, the property has no frontage on Bridge Street. Sara Harwell's property has the frontage.

    1.2. The original structure on this parcel of land was placed 95 feet from the property line 40 years ago. Our proposed structure sits on the original structure's footprint. The back porch's left corner lining up with the original structure's back corner (SE) and the front entry steps leading into the existing gravel drive.

    1.3. The house is oriented to take advantage of the Southwest views of Huger Cove leading to the May River. Bringing it forward would give us a view of the neighbor's back porch.

2. The UDO states that garage access must be to the rear or side of the property.

    2.1. For 40 years the parking has been out in front. The existing semi-circular driveway connecting Colcock Street and Bridge Street services both 73 and 75 Bridge Street.

    2.2. After studying the site carefully, we designed the home to be elevated so that parking could take place underneath the home, which would technically be "behind" the front of the house. Any other position would take away from the existing natural beauty of the property that we want to preserve. Notice that we are not planning to remove any of the trees except for the Cedar stump at the front. (Although that will take some coercion of Babbie and Don)

    2.3. Moving the house Westward would infringe upon the beautiful oak canopy which is very important to us. Moving it too far East would infringe upon the neighboring property's privacy.

    2.4. Having a driveway on the West side, we feel, would destroy the beautiful live oaks on our property and quite possibly root system of those on the neighboring property. A driveway on the East side would take out a palmetto tree and cover up the sewer lines serving the neighbor. Neither of these options would provide enough turning radius.

    2.5. A driveway to the rear of the property would simply ruin the aesthetic of the property's natural beauty.

2.6. Worthy of note is the residence (addressed 40 Colcock Street) has frontage on Bridge Street with a garage and parking in front (Bridge Street). If need be we will change our address to Colcock.

We hope that you will take these things into consideration for a property Grandfathered in.

Sincerely,
Jamie and Lori Guscio

Attachment 3

Attachment 3

Attachment 3

Attachment 3

Attachment 3

Attachment 3

Attachment 3

Attachment 3

Attachment 3

Attachment 3

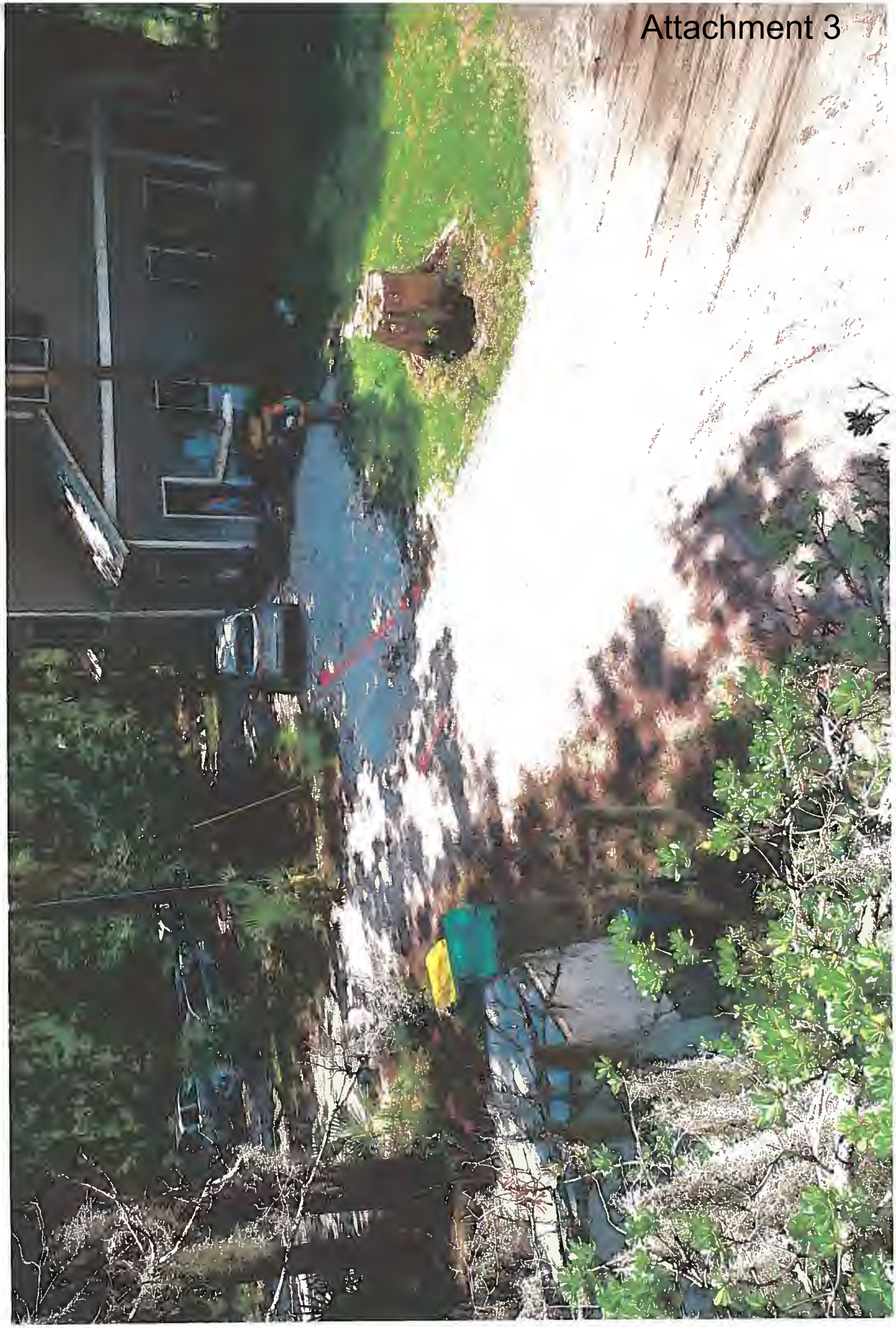

3/10 RB Hale 1057

RECORDED
2019 May -24 04:32 PM
BEAUFORT COUNTY AUDITOR

Attachment 3

BEAUFORT COUNTY SC - ROD
BK 3749 Pgs 535-537
FILE NUM 2019016452
04/03/2019 11:14:26 AM
REC'D BY rbins RCPT# 926266
RECORDING FEES $10.00

ADD DMP Record 5/8/2019 04:42:35 PM
BEAUFORT COUNTY TAX MAP REFERENCE

Dist	Map	SMap	Parcel	Block	Week
R610	039	00A	161D	0000	00

STATE OF SOUTH CAROLINA)
)
COUNTY OF BEAUFORT)

QUITCLAIM DEED

KNOW ALL MEN BY THESE PRESENTS, **THE ELIZABETH FUND, LLC** ("Grantor"), in the State aforesaid and no other consideration of the sum of Ten and no/100 ($10.00) Dollars paid to it in hand at and before the sealing of these presents by **JAMES H. GUSCIO AND LORI A. GUSCIO** ("Grantees) 4 Palmetto Beach Drive, Bluffton, SC 29910 in the State aforesaid the receipt whereof is hereby acknowledged, has remised, released, and forever quit-claimed, and by these Presents do remise, release and forever quit-claim unto the said Grantees, their heirs and/or assigns, as joint tenants with rights of survivorship and not tenants in common, their heirs and/or assigns, forever in fee simple the following described real property, to-wit:

Tax Map No. R610/039/00A/161D/0000

ALL that certain piece, parcel or lot of land, situate, lying and being in the Town of Bluffton, Beaufort County, South Carolina, containing 0.291 acres, more or less, and being bound and described as follows: On the Northeast for a distance of 79.35' feet by lands of Charles Colcock; on the Southeast for a distance of 160.50' feet by lands of Lawrence Dunn; and on the Northwest for a distance of 155.0" feet by lands of Lawrence Dunn; and on the Northwest for a distance of 155.0' feet by lands of Eleanor Bragg and for a distance of 10' feet by a private road giving access to this lot.

For a more particular description, reference is made to that Plat prepared by Carol E. Ekholm, R.L.S. #2047 dated June 1979, and recorded as an attachment to Book 295 at Page 549 on Page 551 in the Office of the Register of Deeds for Beaufort County, SC.

This conveyance is made subject to all easements and restrictions of record and otherwise affecting the property as recorded in the Office of Register of Deeds for Beaufort County, South Carolina.

This being the same property conveyed to the within Grantor by Deed of Don M. Guscio and Elizabeth C. Guscio a/k/a Elizabeth P. Guscio recorded in the Register of Deeds for Beaufort County, South Carolina in Book 3445 at Page 707.

The within Deed was prepared in the Law Office of Hale & Hale, P.A., P. O. Box 22561, Hilton Head Island, South Carolina 29925, by Rebecca H. Hale, Esquire without the benefit of title examination.

TOGETHER with all and singular, the Rights, Members, Hereditaments and Appurtenances to the said Premises belonging, or in anywise incident or appertaining.

TO HAVE AND TO HOLD unto the Grantee, as joint tenants with the right of survivorship and not as tenants in common, their heirs and assigns forever, the Premises and the appurtenances thereto belonging or in anywise appertaining, and all the estate, right, title, interest and claim whatsoever of Grantor if any.

IN WITNESS whereof, the Grantor has caused these presents to be executed as of this 20th day of March in the year of our Lord two thousand nineteen.

SIGNED, SEALED AND DELIVERED
IN THE PRESENCE OF

ELIZABETH FUND, LLC

Eileen H. Hale
non-notary

Don M. Guscio
DON M. GUSCIO, MEMBER

Meredith Lazarski
Notary

Elizabeth P. Guscio
ELIZABETH P. GUSCIO, MEMBER

STATE OF SOUTH CAROLINA)
)
COUNTY OF BEAUFORT)

I, Meredith Lazarski, Notary Public for the State of South Carolina do hereby certify that the within GRANTOR by its authorized representative, personally appeared before me this day and acknowledged the due execution of the foregoing instrument.

WITNESS MY HAND AND SEAL this the 20th day of March, 2019.

Meredith Lazarski
Notary Public for:
My Commission Expires:

MEREDITH LAZARSKI
My Commission Expires
NOTARY PUBLIC
09-24-2020
SOUTH CAROLINA

NOTES:
1. According to FEMA Flood Insurance Rate Map # 45025I 0001 A This Lot Appears To Lie In A Federal Flood Plan Zone C, Minimum Required Elevation Not Subject.
2. This Survey Was Performed Without The Benefit Of A Complete Title Search, And Other Facts That May Be Revealed By A Complete Title Search.
3. This Survey Was Performed Without The Benefit Of A Wetland Delineation.
4. All Building Setback Requirements Should Be Verified With The Proper Authorities Prior To Design And Construction.
Reference Plat:
A PLAT BY CARL E. EKHOLM, PREPARED FOR THE ESTATE OF JULIA COLCOCK, DATED 6/1/1979.

THE ABOVE PLAT PREPARED BY ME AT THE REQUEST OF

ELIZABETH FUND, LLC

AN AS-BUILT, TREE & TOPOGRAPHIC SURVEY OF PARCEL 161D BRIDGE STREET, DISTRICT 610, TAX MAP 39A, TOWN OF BLUFFTON, BEAUFORT COUNTY, SOUTH CAROLINA.

DIST. 610, MAP 39A, PARCEL 161D

I HEREBY STATE TO THE BEST OF MY KNOWLEDGE, INFORMATION AND BELIEF, THE SURVEY SHOWN HEREON WAS MADE IN ACCORDANCE WITH THE REQUIREMENTS OF THE MINIMUM STANDARDS MANUAL FOR THE PRACTICE OF LAND SURVEYING IN SOUTH CAROLINA, AND MEETS OR EXCEEDS THE REQUIREMENTS FOR A CLASS A SURVEY AS SPECIFIED THEREIN.

SOUTH CAROLINA LAND SURVEYOR No.26960 REGISTERED STATE OF WILLIAM J. SMITH

WILLIAM J. SMITH, PLS # 26960

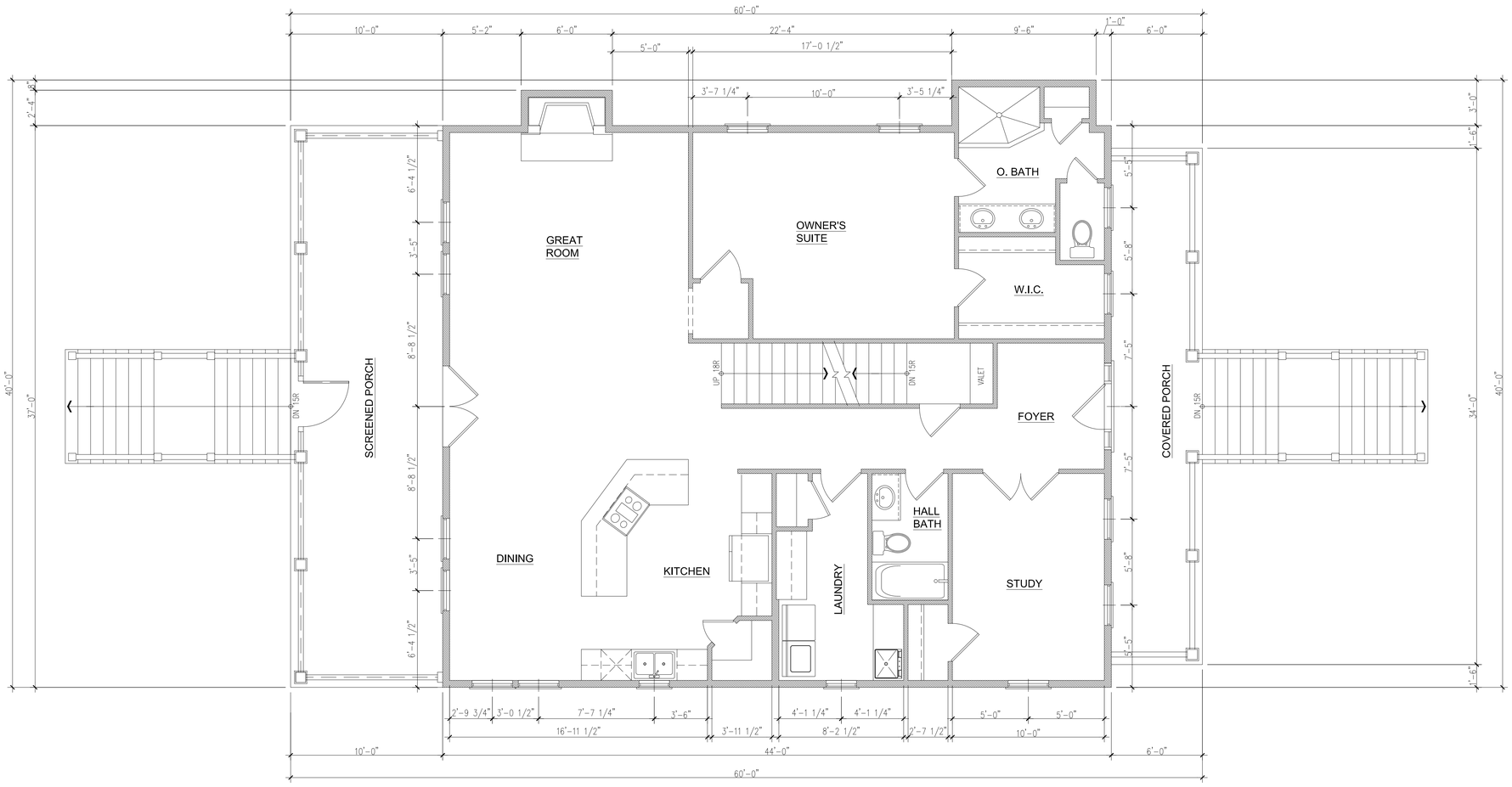

FIRST FLOOR PLAN

1/4" = 1'-0"

SQUARE FOOTAGE

1st FLOOR = 1671 SF
2nd FLOOR = 757 SF
TOTAL HEATED = 2428 SF

FRONT PORCH = 204 SF
SCREENED PORCH = 370

TOTAL UNDER ROOF = 3002 SF

IT IS THE RESPONSIBILITY OF THE CONTRACTOR TO VERIFY, CHECK, AND COORDINATE ALL DIMENSIONS AND REQUIRED MINIMUM FLOOR ELEVATIONS AND TO NOTIFY THE DESIGNER OF ANY DISCREPANCIES PRIOR TO COMMENCEMENT OF CONSTRUCTION. THE DESIGNER ASSUMES NO LIABILITY WHATSOEVER FROM ANY DAMAGES, INJURIES, DEATHS, LEGAL FEES OR LAWSUITS OF ANY KIND THAT MAY ARISE OR RESULT FROM THE EXECUTION OF THE DESIGN OR PERFORMANCE OF ITEMS NOT SHOWN, NOT PROVIDED, OR NOT CORRECTLY COORDINATED. IT IS THE RESPONSIBILITY OF THE CONTRACTOR TO COORDINATE ALL CONDITIONS PRESENT BY THESE DRAWINGS WITH ALL GOVERNING BUILDING / CONSTRUCTION CODES PERTAINING TO THE EXECUTION OF THE DESIGN.

FIRST FLOOR PLAN

GUSCIO RESIDENCE

Parcel 161D
#75 Bridge Street
Bluffton Township, Beaufort County, SC

REVISION	DATE

SHEET #

A2

FILE # JG20-02.DWG
DATE 09.01.20

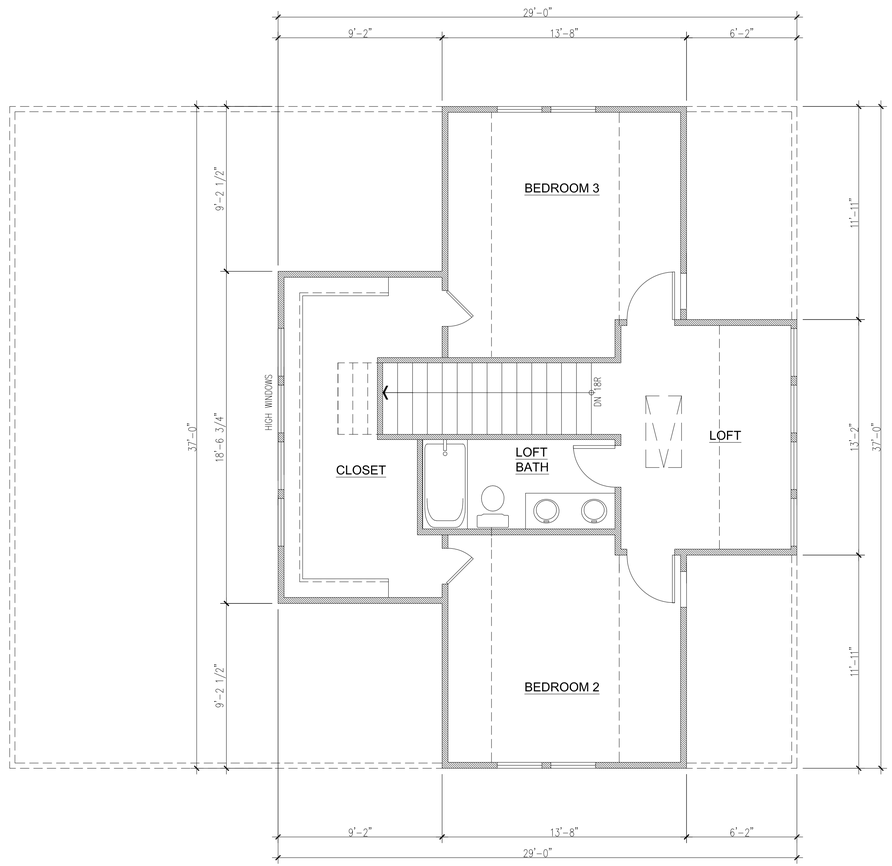

SECOND FLOOR PLAN

1/4" = 1'-0"

IT IS THE RESPONSIBILITY OF THE CONTRACTOR TO VERIFY, CHECK, AND COORDINATE ALL DIMENSIONS AND REQUIRED MINIMUM FLOOR ELEVATIONS AND TO NOTIFY THE DESIGNER OF ANY DISCREPANCIES PRIOR TO COMMENCEMENT OF CONSTRUCTION. THE DESIGNER ASSUMES NO LIABILITY WHATSOEVER FROM ANY DAMAGES, INJURIES, DEATHS, LEGAL FEES OR LAWSUITS OF ANY KIND THAT MAY ARISE OR RESULT FROM THE EXECUTION OF THE DESIGN OR PERFORMANCE OF THE WORK BY THE CONTRACTOR. IT IS THE RESPONSIBILITY OF THE CONTRACTOR TO COORDINATE ALL CONDITIONS PRESENT IN THESE DRAWINGS WITH ALL GOVERNING BUILDING / CONSTRUCTION CODES PERTAINING TO THE EXECUTION OF THE DESIGN.

SECOND FLOOR PLAN

GUSCIO RESIDENCE
Parcel 161D
#75 Bridge Street
Bluffton Township, Beaufort County, SC

REVISION	DATE

SHEET #
A3

FILE # JG20-02.DWG
DATE 09.01.20

Attachment 4

FRONT ELEVATION

1/4" = 1'-0"

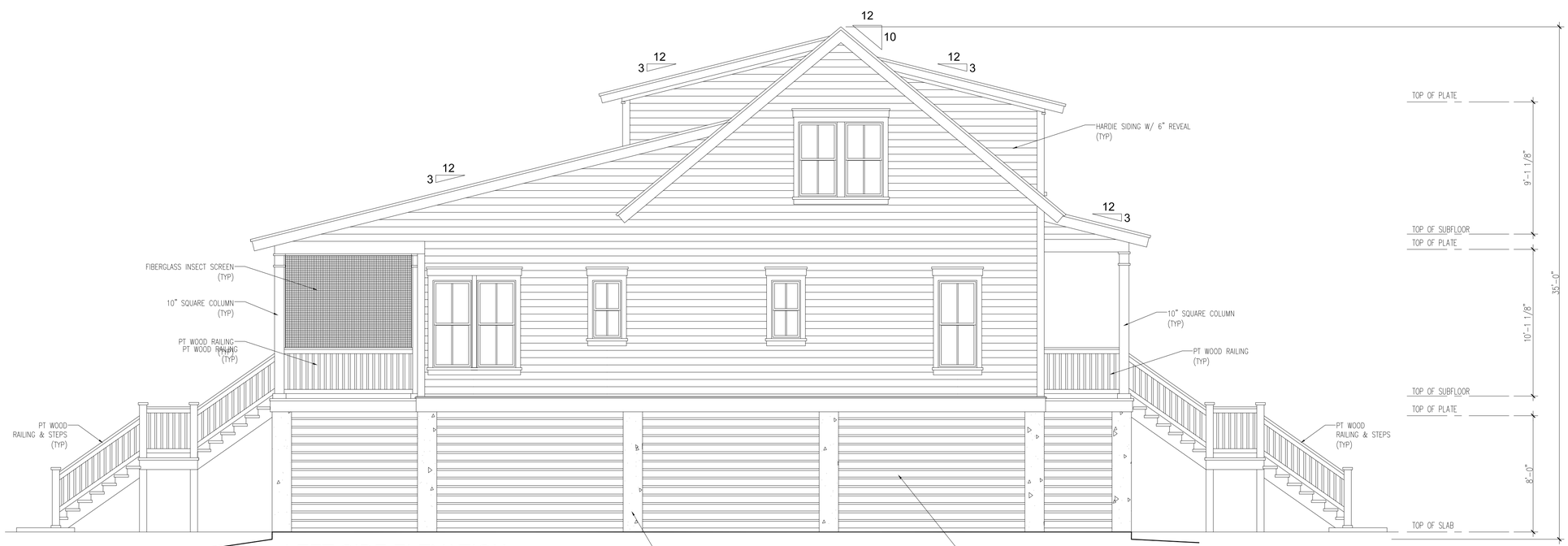

LEFT SIDE ELEVATION

1/4" = 1'-0"

IT IS THE RESPONSIBILITY OF THE CONTRACTOR TO VERIFY, CHECK, AND COORDINATE ALL DIMENSIONS AND REQUIRED MINIMUM FLOOR ELEVATIONS AND TO NOTIFY THE DESIGNER OF ANY DISCREPANCIES PRIOR TO COMMENCEMENT OF CONSTRUCTION. THE DESIGNER ASSUMES NO LIABILITY WHATSOEVER FROM ANY DAMAGES, INJURIES, DEATHS, LEGAL FEES OR LAWSUITS OF ANY KIND THAT MAY ARISE OR RESULT FROM THE EXECUTION OF THE DESIGN OR PERFORMANCE OF THE WORK BY THE CONTRACTOR. IT IS THE RESPONSIBILITY OF THE CONTRACTOR TO COORDINATE ALL CONDITIONS PRESENT IN THESE DRAWINGS WITH ALL GOVERNING BUILDING / CONSTRUCTION CODES PERTAINING TO THE EXECUTION OF THE DESIGN.

FRONT ELEVATION
LEFT SIDE ELEVATION

GUSCIO RESIDENCE
Parcel 161D
#75 Bridge Street
Bluffton Township, Beaufort County, SC

REVISION	DATE

SHEET #

A4

FILE # JG20-02.DWG

DATE 09.01.20

Attachment 4

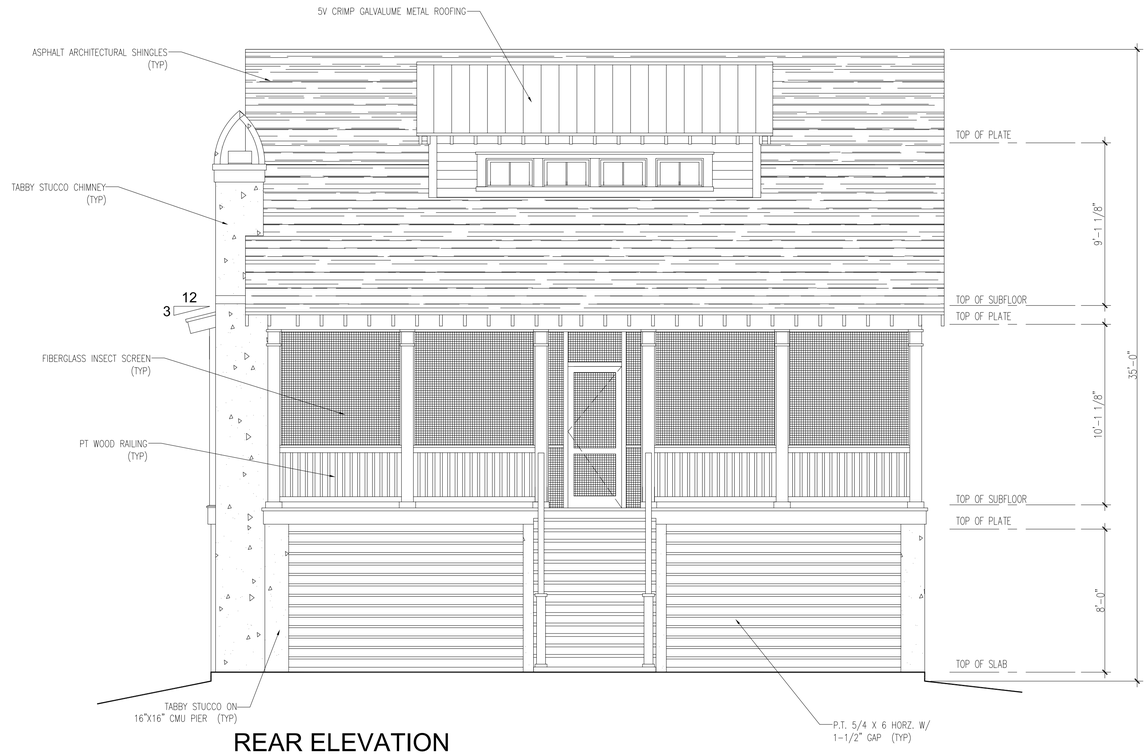

REAR ELEVATION

1/4" = 1'-0"

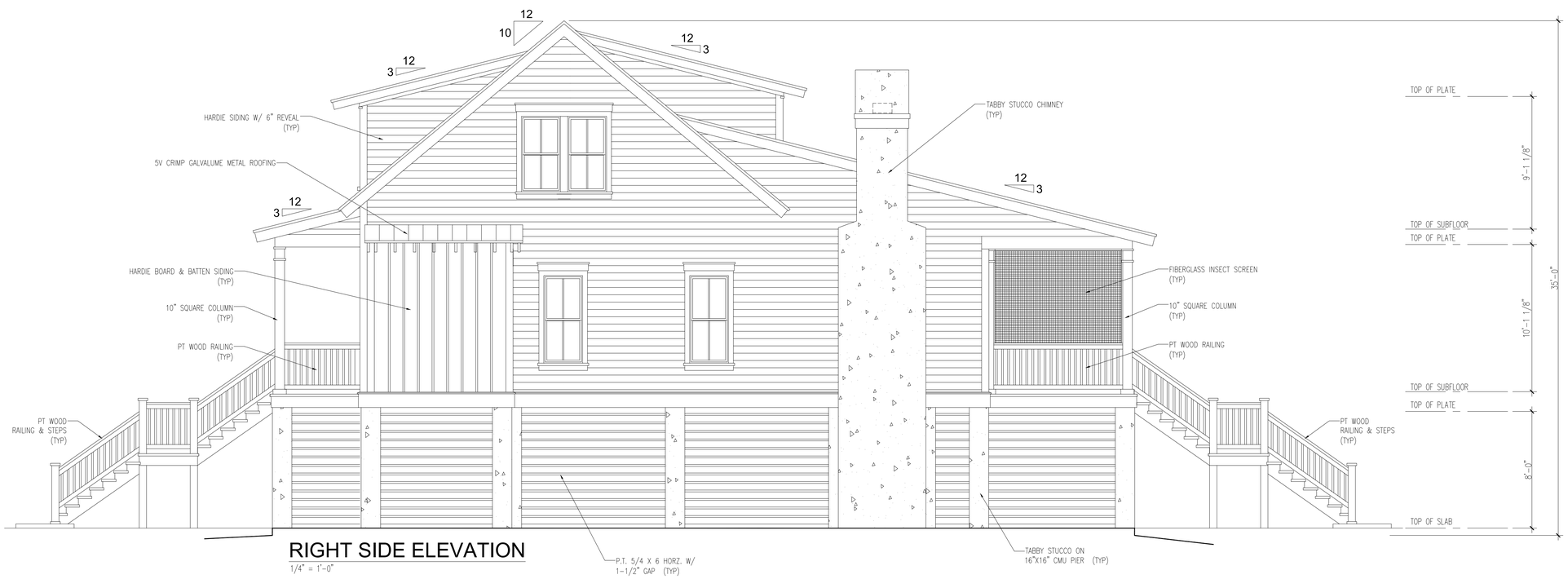

RIGHT SIDE ELEVATION

1/4" = 1'-0"

IT IS THE RESPONSIBILITY OF THE CONTRACTOR TO VERIFY, CHECK, AND COORDINATE ALL DIMENSIONS AND REQUIRED MINIMUM FLOOR ELEVATIONS AND TO NOTIFY THE DESIGNER OF ANY DISCREPANCIES PRIOR TO COMMENCEMENT OF CONSTRUCTION. THE DESIGNER ASSUMES NO LIABILITY WHATSOEVER FROM ANY DAMAGES, INJURIES, DEATHS, LEGAL FEES OR LAWSUITS OF ANY KIND THAT MAY ARISE OR RESULT FROM THE EXECUTION OF THE DESIGN OR PERFORMANCE OF THE WORK BY THE CONTRACTORS. IT IS THE RESPONSIBILITY OF THE CONTRACTOR TO COORDINATE ALL CONDITIONS PRESENT IN THESE DRAWINGS WITH ALL GOVERNING BUILDING / CONSTRUCTION CODES PERTAINING TO THE EXECUTION OF THE DESIGN.

REAR ELEVATION
RIGHT SIDE ELEVATION

GUSCIO RESIDENCE
Parcel 161D
#75 Bridge Street
Bluffton Township, Beaufort County, SC

REVISION	DATE

SHEET #

A5

FILE # JG20-02.DWG

DATE 09.01.20

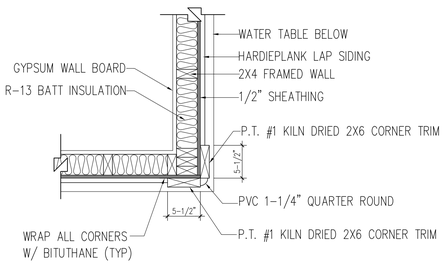

TYPICAL DETAIL AT CORNER TRIM

SCALE: 1"=1'-0"

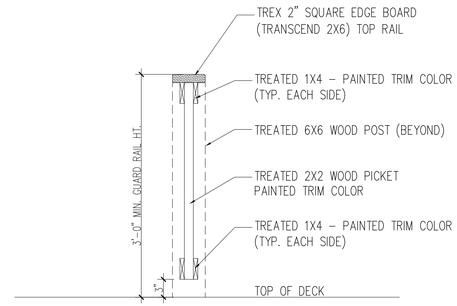

NOTE: ALL FASTENERS (NAILS, BOLTS, SCREWS & WASHERS) SHALL BE HOT DIPPED GALVANIZED OR STAINLESS STEEL

TYPICAL PICKET & RAIL DETAIL

SCALE: 1"=1'-0"

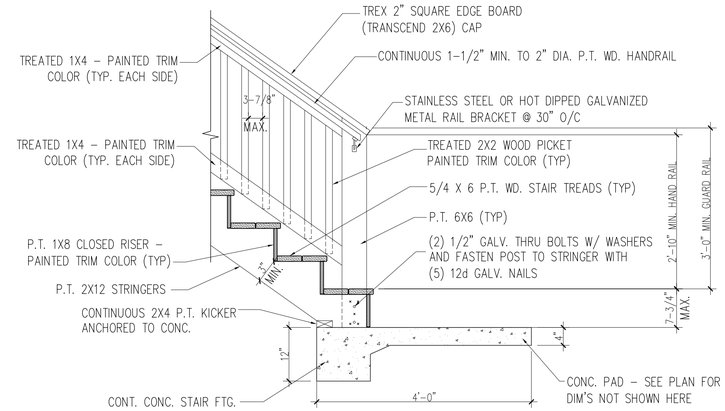

NOTE: ALL FASTENERS (NAILS, BOLTS, SCREWS & WASHERS) SHALL BE HOT DIPPED GALVANIZED OR STAINLESS STEEL

TYPICAL STAIR TO GRADE DETAIL

SCALE: 3/4"=1'-0"

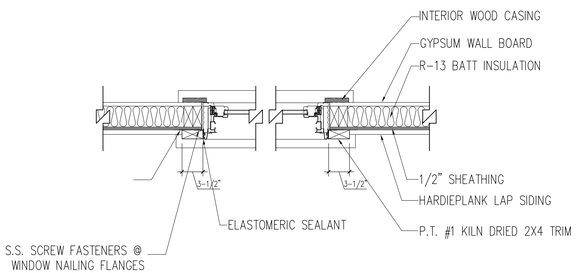

TYPICAL DETAIL AT WINDOW JAMB

SCALE: 1"=1'-0"

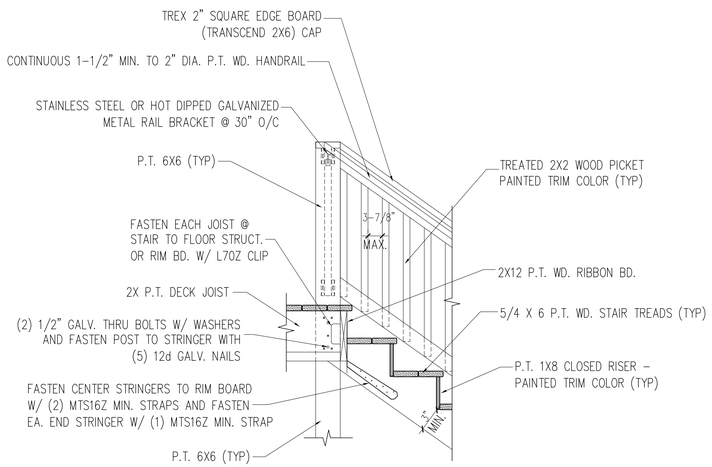

NOTE: ALL FASTENERS (NAILS, BOLTS, SCREWS & WASHERS) SHALL BE HOT DIPPED GALVANIZED OR STAINLESS STEEL

TYPICAL STAIR TO DECK DETAIL

SCALE: 3/4"=1'-0"

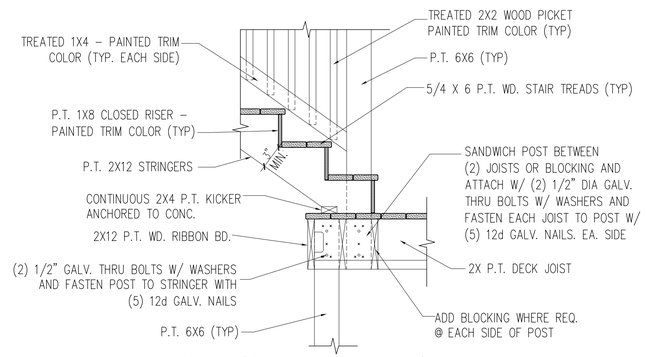

NOTE: ALL FASTENERS (NAILS, BOLTS, SCREWS & WASHERS) SHALL BE HOT DIPPED GALVANIZED OR STAINLESS STEEL

TYPICAL STAIR TO LANDING DETAIL

SCALE: 3/4"=1'-0"

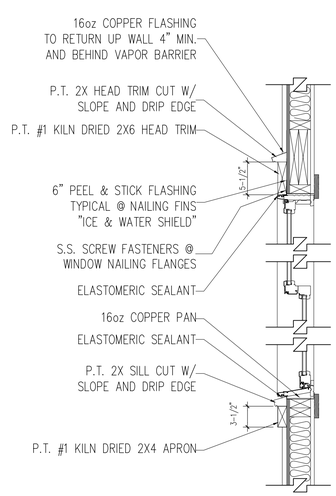

TYPICAL DETAIL AT WINDOW HEAD & SILL

SCALE: 1"=1'-0"

IT IS THE RESPONSIBILITY OF THE CONTRACTOR TO VERIFY, CHECK, AND COORDINATE ALL DIMENSIONS AND REQUIRED MINIMUM FLOOR ELEVATIONS AND TO NOTIFY THE DESIGNER OF ANY DISCREPANCIES PRIOR TO COMMENCEMENT OF CONSTRUCTION. THE DESIGNER ASSUMES NO LIABILITY WHATSOEVER FROM ANY DAMAGES, INJURIES, DEATHS, LEGAL FEES OR LAWSUITS OF ANY KIND THAT MAY ARISE OR RESULT FROM THE EXECUTION OF THE DESIGN OR PERFORMANCE OF WORK WHICH IS NOT IN ACCORDANCE WITH THESE DRAWINGS. IT IS THE RESPONSIBILITY OF THE CONTRACTOR TO COORDINATE ALL CONDITIONS PRESENT BY THESE DRAWINGS WITH ALL GOVERNING BUILDING / CONSTRUCTION CODES PERTAINING TO THE EXECUTION OF THE DESIGN.

TYPICAL DETAILS

GUSCIO RESIDENCE
Parcel 161D
#75 Bridge Street
Bluffton Township, Beaufort County, SC

REVISION	DATE

SHEET #

A7

FILE # JG20-02.DWG
DATE 09.01.20

Attachment 4

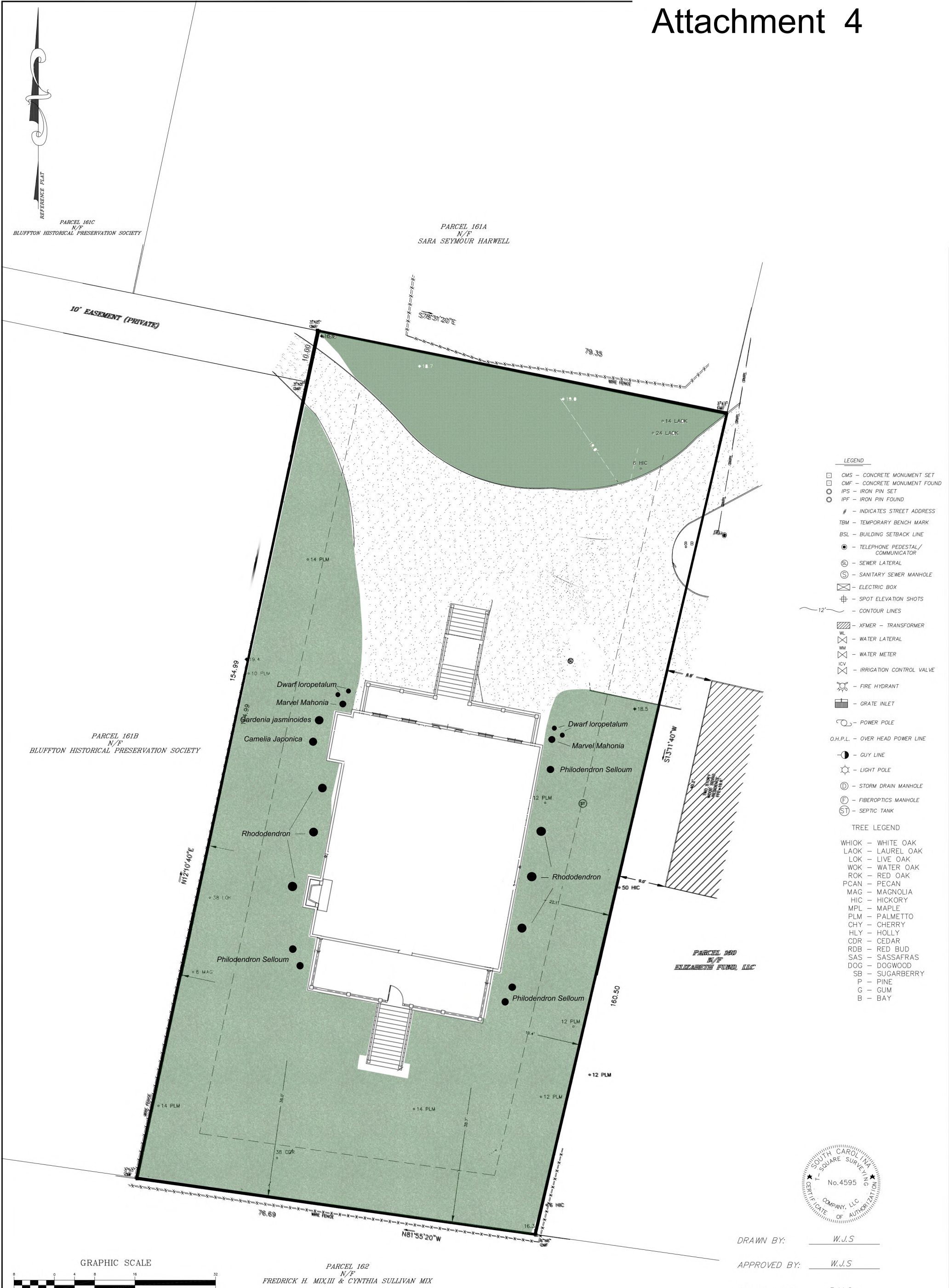

LEGEND

- CMS – CONCRETE MONUMENT SET
- CMF – CONCRETE MONUMENT FOUND
- IPS – IRON PIN SET
- IPF – IRON PIN FOUND
- # – INDICATES STREET ADDRESS
- TBM – TEMPORARY BENCH MARK
- BSL – BUILDING SETBACK LINE
- TELEPHONE PEDESTAL/ COMMUNICATOR
- SL – SEWER LATERAL
- S – SANITARY SEWER MANHOLE
- ELECTRIC BOX
- SPOT ELEVATION SHOTS
- 12' – CONTOUR LINES
- XFMER – TRANSFORMER
- WL – WATER LATERAL
- WM – WATER METER
- ICV – IRRIGATION CONTROL VALVE
- FIRE HYDRANT
- GRATE INLET
- POWER POLE
- O.H.P.L. – OVER HEAD POWER LINE
- GUY LINE
- LIGHT POLE
- D – STORM DRAIN MANHOLE
- F – FIBEROPTICS MANHOLE
- ST – SEPTIC TANK

TREE LEGEND

WHIOK	WHITE OAK
LAOK	LAUREL OAK
LOK	LIVE OAK
WOK	WATER OAK
ROK	RED OAK
PCAN	PECAN
MAG	MAGNOLIA
HIC	HICKORY
MPL	MAPLE
PLM	PALMETTO
CHY	CHERRY
HLY	HOLLY
CDR	CEDAR
RDB	RED BUD
SAS	SASSAFRAS
DOG	DOGWOOD
SB	SUGARBERRY
P	PINE
G	GUM
B	BAY

SOUTH CAROLINA T-SQUARE SURVEYING COMPANY, LLC No.4595 CERTIFICATE OF AUTHORIZATION

DRAWN BY: W.J.S

APPROVED BY: W.J.S

PARTY CHIEF: B.M.S

DATE: AUGUST 26, 2016

T SQUARE SURVEYING
PROFESSIONAL LAND SURVEYORS
P.O. Drawer 330
139 Burnt Church Road
Bluffton, S.C. 29910
tsquare@hargray.com
Phone 843-757-2650 Fax 843-757-5758

JOB No. 16-354AT

STATE OF SOUTH CAROLINA REGISTERED LAND SURVEYOR No.26960 WILLIAM J. SMITH

I HEREBY STATE TO THE BEST OF MY KNOWLEDGE, INFORMATION & BELIEF, THE SURVEY SHOWN HEREON WAS MADE IN ACCORDANCE WITH THE REQUIREMENTS OF THE MINIMUM STANDARDS MANUAL FOR THE PRACTICE OF LAND SURVEYING IN SOUTH CAROLINA, AND MEETS OR EXCEEDS THE REQUIREMENTS FOR A CLASS A SURVEY AS SPECIFIED THEREIN.

WILLIAM J. SMITH, PLS # 26960

THE ABOVE PLAT PREPARED BY ME AT THE REQUEST OF

ELIZABETH FUND, LLC

AN AS-BUILT, TREE & TOPOGRAPHIC SURVEY OF PARCEL 161D BRIDGE STREET, DISTRICT 610, TAX MAP 39A, TOWN OF BLUFFTON, BEAUFORT COUNTY, SOUTH CAROLINA.

DIST. 610, MAP 39A, PARCEL 161D

Notes:

1. According To FEMA Flood Insurance Rate Map # 450251 0001 A This Lot Appears To Lie In A Federal Flood Plain Zone C, Minimum Required Elevation N/A Ft. NGVD29.
2. This Property May Be Subject To Easements, Protective Covenants And Other Facts That May Be Revealed By A Complete Title Search.
3. This Survey Was Performed Without The Benefit Of A Wetland Delineation.
4. All Building Setback Requirements Should Be Verified With The Proper Authorities Prior To Design And Construction.

Reference Plat(s):
A PLAT BY CARL E. EKHOLM, PREPARED FOR THE ESTATE OF JULIA COLCOCK, DATED 6/1/1979.

Attachment 4

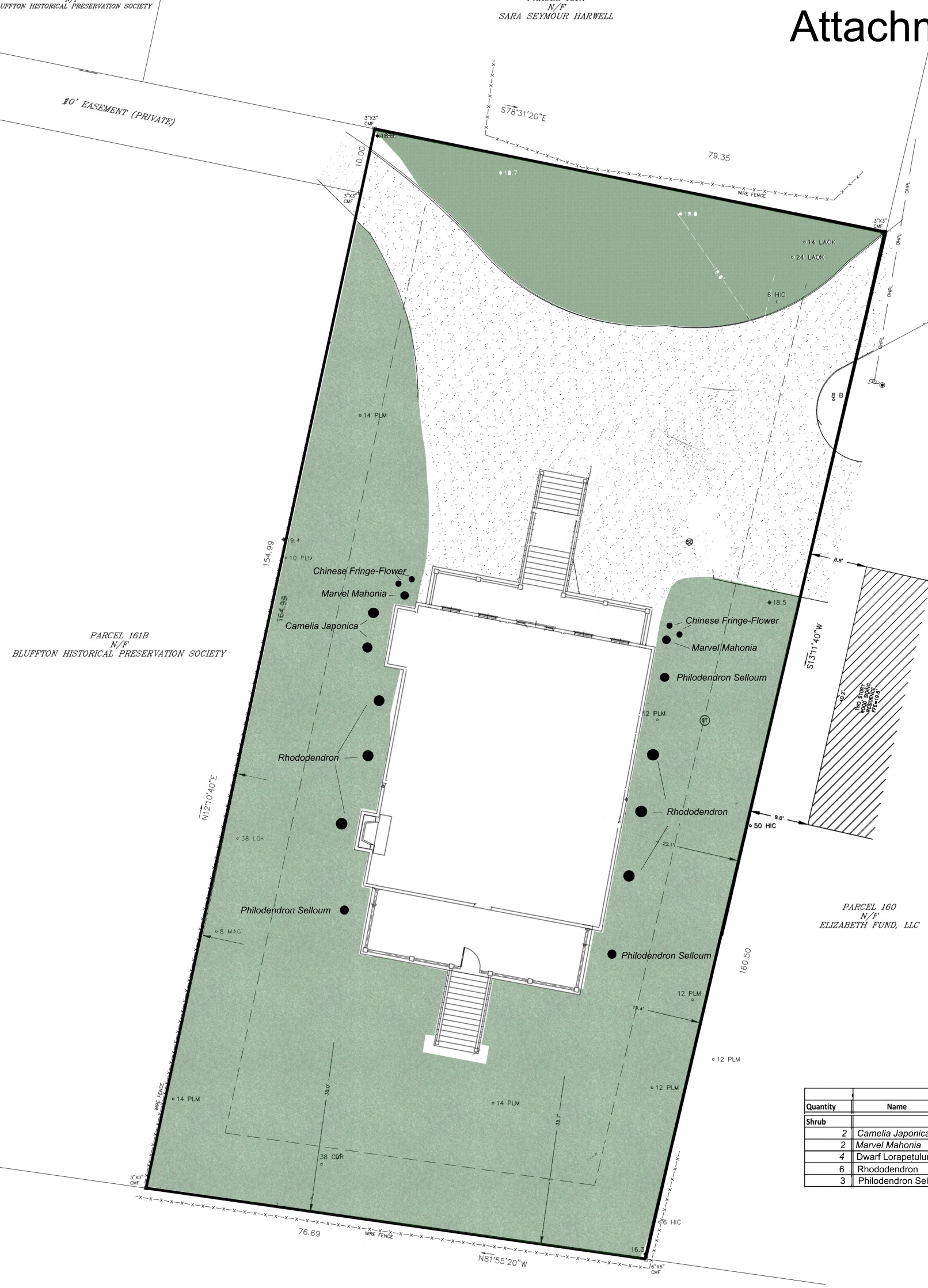

Quantity	Name	Mat. Height	Mat. Spread	Container
Shrub				
2	*Camelia Japonica*	12'	10'	15 gal.
2	*Marvel Mahonia*	6' -8'	4'	7 gal.
4	Dwarf Lorapetulum	2-3'	3-4'	7 gal.
6	Rhododendron	6-8'	6-8'	7 gal.
3	Philodendron Selloum	6-10'	6-8'	7 gal

Attachment 4

NOTES:
1. According to FEMA Flood Insurance Rate Map # 45025I 0001 A This Lot Appears To Lie In A Federal Flood Plan Zone C, Minimum Required Elevation Not Subject.
2. This Survey Was Performed Without The Benefit Of A Complete Title Search, And Other Facts That May Be Revealed By A Complete Title Search.
3. This Survey Was Performed Without The Benefit Of A Wetland Delineation.
4. All Building Setback Requirements Should Be Verified With The Proper Authorities Prior To Design And Construction.
Reference Plat:
A PLAT BY CARL E. EKHOLM, PREPARED FOR THE ESTATE OF JULIA COLCOCK, DATED 6/1/1979.

THE ABOVE PLAT PREPARED BY ME AT THE REQUEST OF

ELIZABETH FUND, LLC

AN AS-BUILT, TREE & TOPOGRAPHIC SURVEY OF PARCEL 161D BRIDGE STREET, DISTRICT 610, TAX MAP 39A, TOWN OF BLUFFTON, BEAUFORT COUNTY, SOUTH CAROLINA.

DIST. 610, MAP 39A, PARCEL 161D

I HEREBY STATE TO THE BEST OF MY KNOWLEDGE, INFORMATION AND BELIEF, THE SURVEY SHOWN HEREON WAS MADE IN ACCORDANCE WITH THE REQUIREMENTS OF THE MINIMUM STANDARDS MANUAL FOR THE PRACTICE OF LAND SURVEYING IN SOUTH CAROLINA, AND MEETS OR EXCEEDS THE REQUIREMENTS FOR A CLASS A SURVEY AS SPECIFIED THEREIN.

SOUTH CAROLINA LAND SURVEYOR No.26960 REGISTERED STATE OF WILLIAM J. SMITH

WILLIAM J. SMITH, PLS # 26960

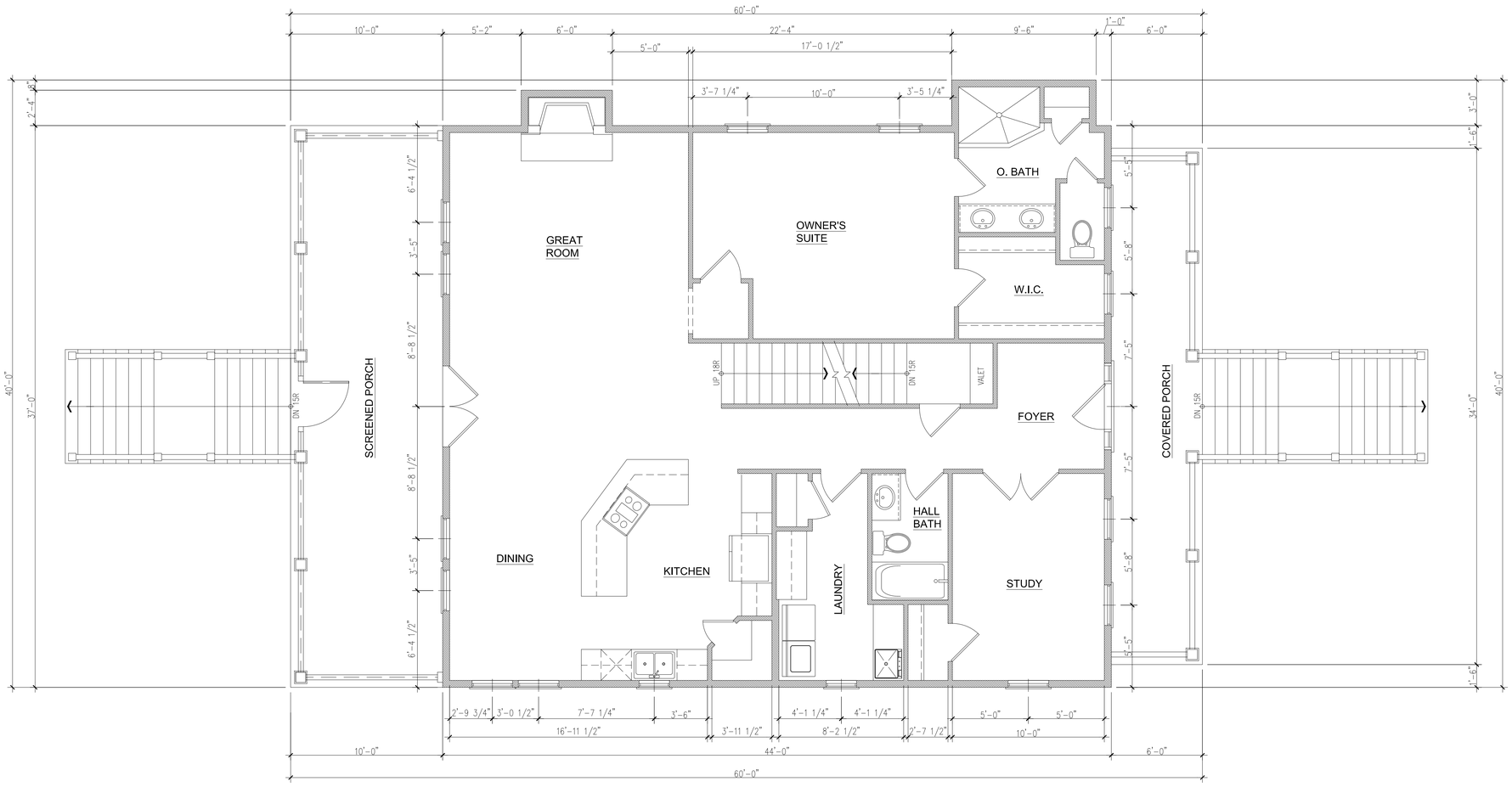

FIRST FLOOR PLAN

1/4" = 1'-0"

SQUARE FOOTAGE

1st FLOOR = 1671 SF
2nd FLOOR = 757 SF
TOTAL HEATED = 2428 SF

FRONT PORCH = 204 SF
SCREENED PORCH = 370

TOTAL UNDER ROOF = 3002 SF

IT IS THE RESPONSIBILITY OF THE CONTRACTOR TO VERIFY, CHECK, AND COORDINATE ALL DIMENSIONS AND REQUIRED MINIMUM FLOOR ELEVATIONS AND TO NOTIFY THE DESIGNER OF ANY DISCREPANCIES PRIOR TO COMMENCEMENT OF CONSTRUCTION. THE DESIGNER ASSUMES NO LIABILITY WHATSOEVER FROM ANY DAMAGES, INJURIES, DEATHS, LEGAL FEES OR LAWSUITS OF ANY KIND THAT MAY ARISE OR RESULT FROM THE EXECUTION OF THE DESIGN OR PERFORMANCE OF ITEMS NOT SHOWN, NOT PROVIDED, OR NOT CORRECTLY COORDINATED. IT IS THE RESPONSIBILITY OF THE CONTRACTOR TO COORDINATE ALL CONDITIONS PRESENT BY THESE DRAWINGS WITH ALL GOVERNING BUILDING / CONSTRUCTION CODES PERTAINING TO THE EXECUTION OF THE DESIGN.

FIRST FLOOR PLAN

GUSCIO RESIDENCE

Parcel 161D
#75 Bridge Street
Bluffton Township, Beaufort County, SC

REVISION	DATE

SHEET #

A2

FILE # JG20-02.DWG
DATE 09.01.20

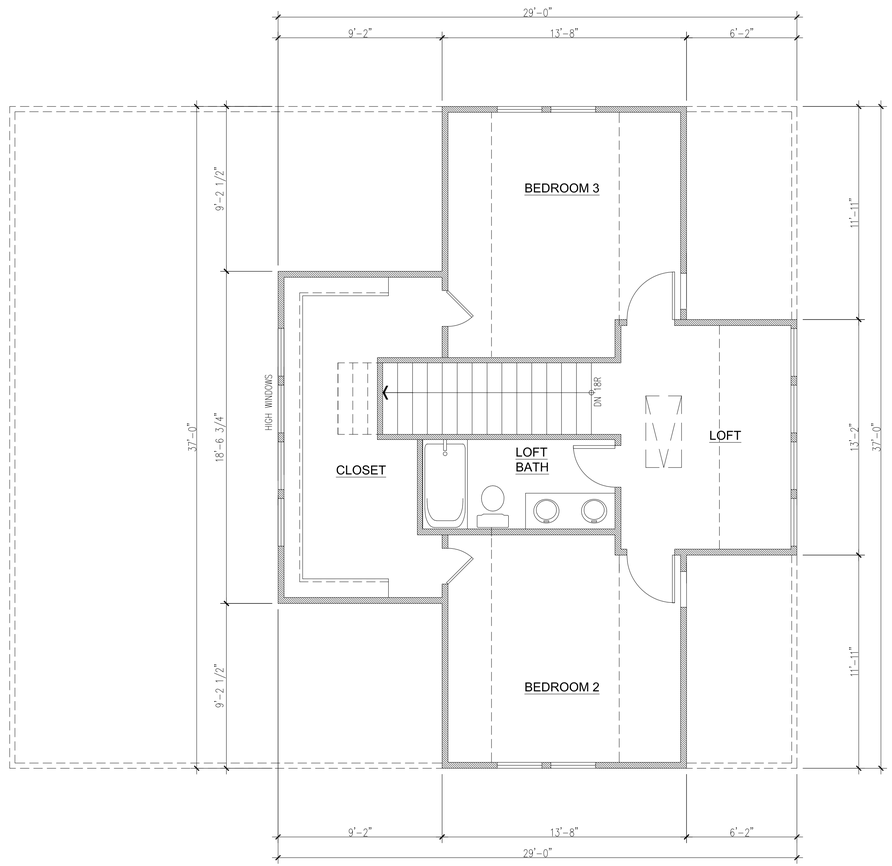

SECOND FLOOR PLAN

1/4" = 1'-0"

IT IS THE RESPONSIBILITY OF THE CONTRACTOR TO VERIFY, CHECK, AND COORDINATE ALL DIMENSIONS AND REQUIRED MINIMUM FLOOR ELEVATIONS AND TO NOTIFY THE DESIGNER OF ANY DISCREPANCIES PRIOR TO COMMENCEMENT OF CONSTRUCTION. THE DESIGNER ASSUMES NO LIABILITY WHATSOEVER FROM ANY DAMAGES, INJURIES, DEATHS, LEGAL FEES OR LAWSUITS OF ANY KIND THAT MAY ARISE OR RESULT FROM THE EXECUTION OF THE DESIGN OR PERFORMANCE OF THE WORK BY THE CONTRACTOR. IT IS THE RESPONSIBILITY OF THE CONTRACTOR TO COORDINATE ALL CONDITIONS PRESENT IN THESE DRAWINGS WITH ALL GOVERNING BUILDING / CONSTRUCTION CODES PERTAINING TO THE EXECUTION OF THE DESIGN.

SECOND FLOOR PLAN

GUSCIO RESIDENCE
Parcel 161D
#75 Bridge Street
Bluffton Township, Beaufort County, SC

REVISION	DATE

SHEET #

A3

FILE # JG20-02.DWG
DATE 09.01.20

Attachment 4

FRONT ELEVATION

1/4" = 1'-0"

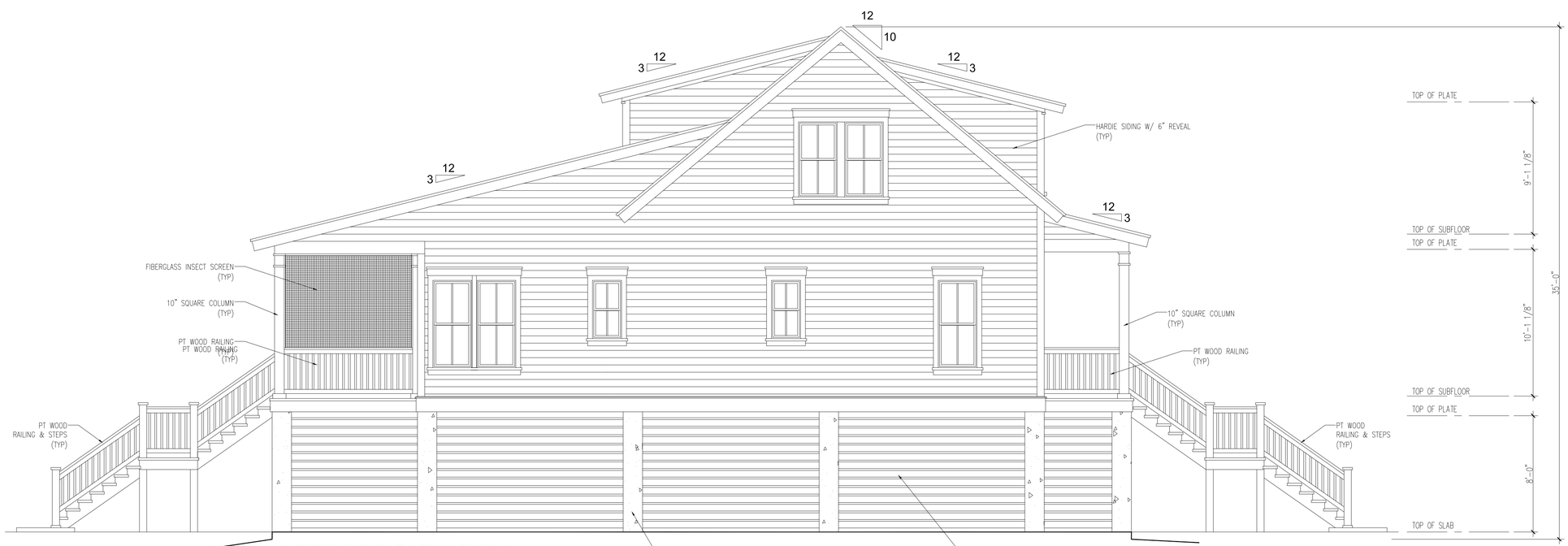

LEFT SIDE ELEVATION

1/4" = 1'-0"

IT IS THE RESPONSIBILITY OF THE CONTRACTOR TO VERIFY, CHECK, AND COORDINATE ALL DIMENSIONS AND REQUIRED MINIMUM FLOOR ELEVATIONS AND TO NOTIFY THE DESIGNER OF ANY DISCREPANCIES PRIOR TO COMMENCEMENT OF CONSTRUCTION. THE DESIGNER ASSUMES NO LIABILITY WHATSOEVER FROM ANY DAMAGES, INJURIES, DEATHS, LEGAL FEES OR LAWSUITS OF ANY KIND THAT MAY ARISE OR RESULT FROM THE EXECUTION OF THE DESIGN OR PERFORMANCE OF THE WORK BY THE CONTRACTOR. IT IS THE RESPONSIBILITY OF THE CONTRACTOR TO COORDINATE ALL CONDITIONS PRESENT IN THESE DRAWINGS WITH ALL GOVERNING BUILDING / CONSTRUCTION CODES PERTAINING TO THE EXECUTION OF THE DESIGN.

FRONT ELEVATION
LEFT SIDE ELEVATION

GUSCIO RESIDENCE
Parcel 161D
#75 Bridge Street
Bluffton Township, Beaufort County, SC

REVISION	DATE

SHEET #

A4

FILE # JG20-02.DWG

DATE 09.01.20

Attachment 4

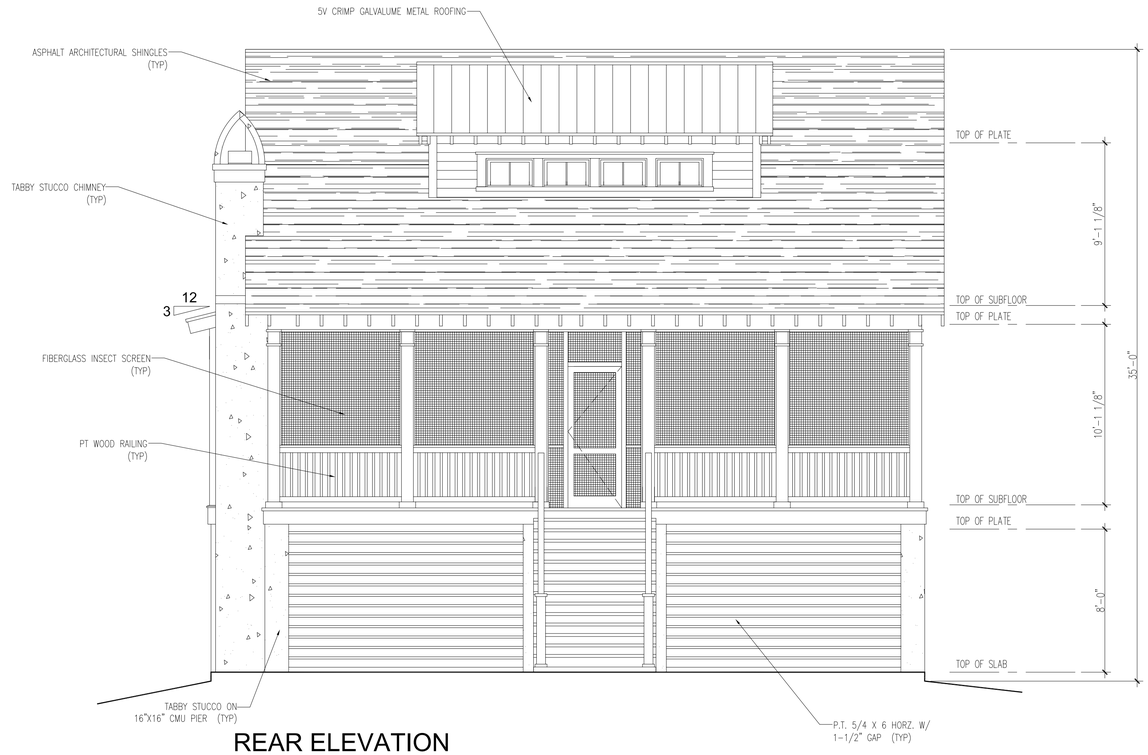

REAR ELEVATION

1/4" = 1'-0"

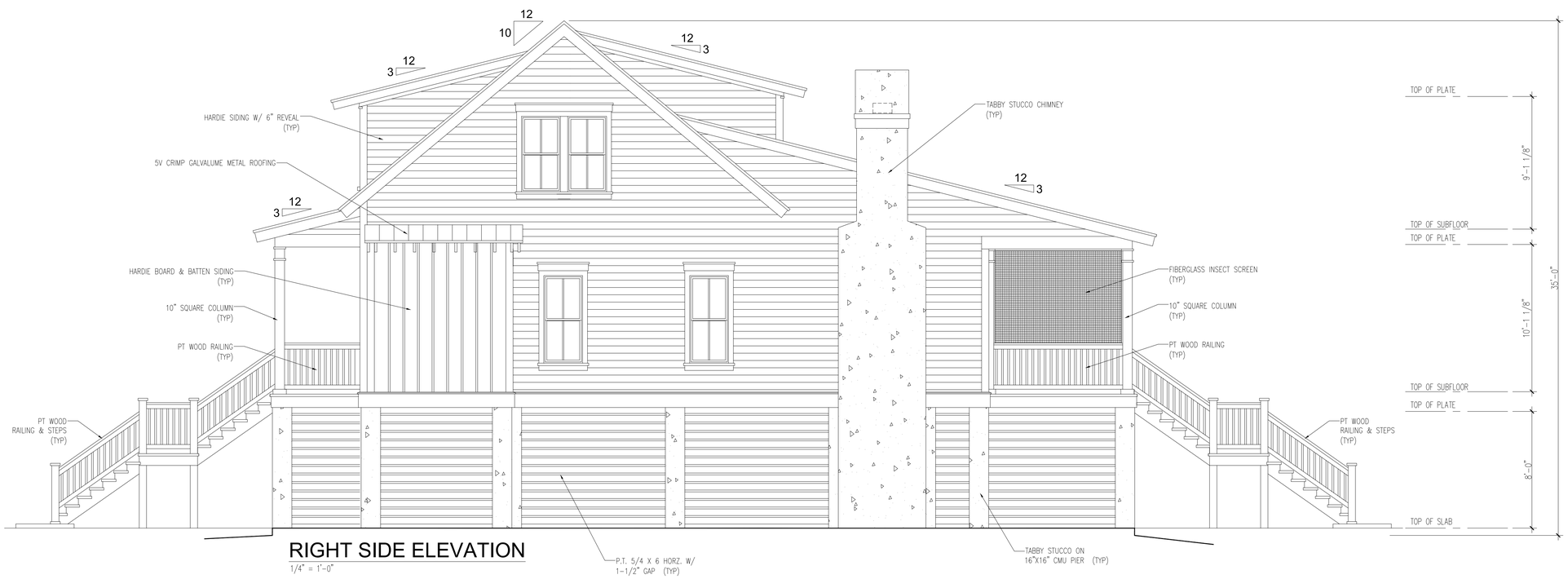

RIGHT SIDE ELEVATION

1/4" = 1'-0"

IT IS THE RESPONSIBILITY OF THE CONTRACTOR TO VERIFY, CHECK, AND COORDINATE ALL DIMENSIONS AND REQUIRED MINIMUM FLOOR ELEVATIONS AND TO NOTIFY THE DESIGNER OF ANY DISCREPANCIES PRIOR TO COMMENCEMENT OF CONSTRUCTION. THE DESIGNER ASSUMES NO LIABILITY WHATSOEVER FROM ANY DAMAGES, INJURIES, DEATHS, LEGAL FEES OR LAWSUITS OF ANY KIND THAT MAY ARISE OR RESULT FROM THE EXECUTION OF THE DESIGN OR PERFORMANCE OF THE WORK BY THE CONTRACTORS. IT IS THE RESPONSIBILITY OF THE CONTRACTOR TO COORDINATE ALL CONDITIONS PRESENT IN THESE DRAWINGS WITH ALL GOVERNING BUILDING / CONSTRUCTION CODES PERTAINING TO THE EXECUTION OF THE DESIGN.

REAR ELEVATION
RIGHT SIDE ELEVATION

GUSCIO RESIDENCE
Parcel 161D
#75 Bridge Street
Bluffton Township, Beaufort County, SC

REVISION	DATE

SHEET #

A5

FILE # JG20-02.DWG

DATE 09.01.20

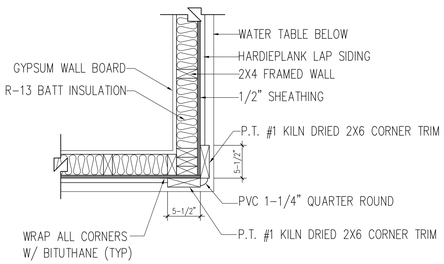

TYPICAL DETAIL AT CORNER TRIM

SCALE: 1"=1'-0"

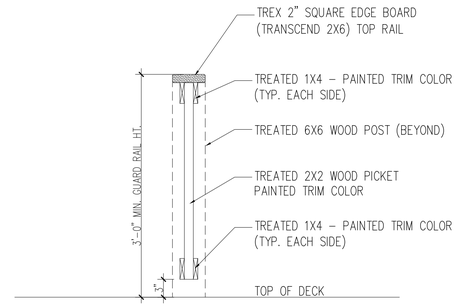

NOTE: ALL FASTENERS (NAILS, BOLTS, SCREWS & WASHERS) SHALL BE HOT DIPPED GALVANIZED OR STAINLESS STEEL

TYPICAL PICKET & RAIL DETAIL

SCALE: 1"=1'-0"

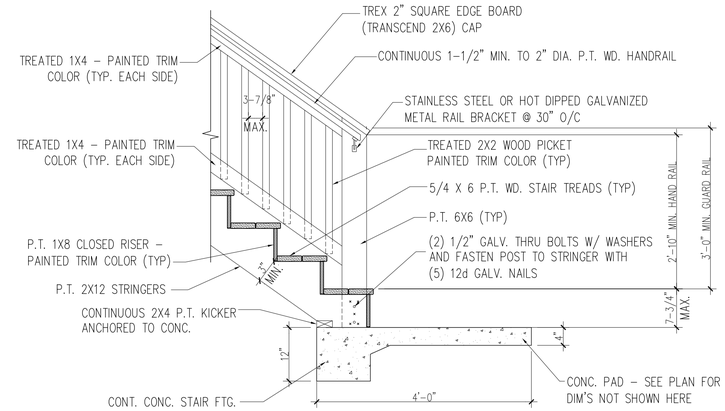

NOTE: ALL FASTENERS (NAILS, BOLTS, SCREWS & WASHERS) SHALL BE HOT DIPPED GALVANIZED OR STAINLESS STEEL

TYPICAL STAIR TO GRADE DETAIL

SCALE: 3/4"=1'-0"

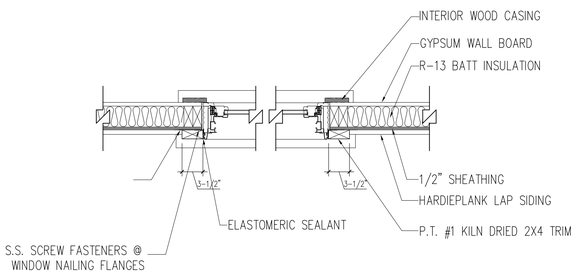

TYPICAL DETAIL AT WINDOW JAMB

SCALE: 1"=1'-0"

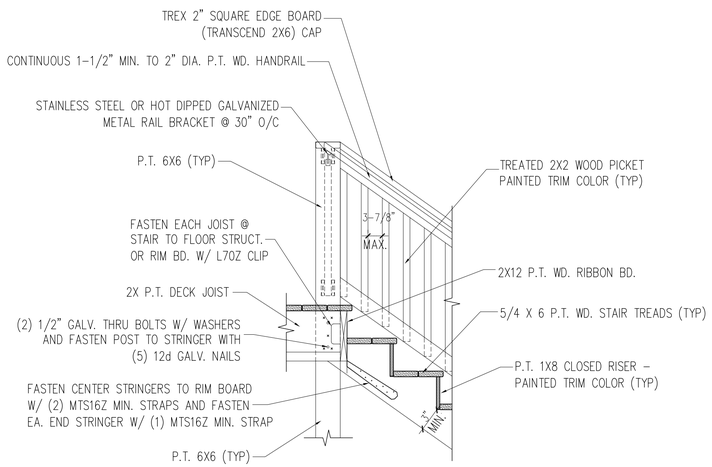

NOTE: ALL FASTENERS (NAILS, BOLTS, SCREWS & WASHERS) SHALL BE HOT DIPPED GALVANIZED OR STAINLESS STEEL

TYPICAL STAIR TO DECK DETAIL

SCALE: 3/4"=1'-0"

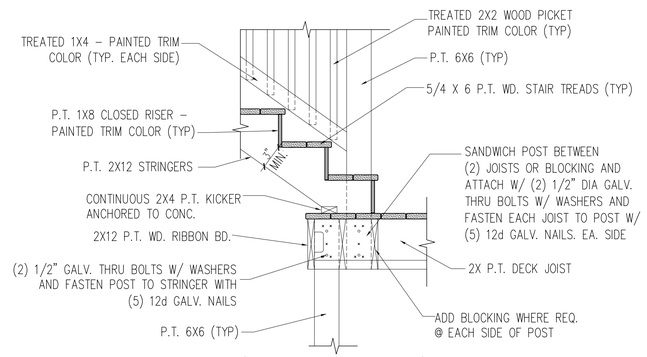

NOTE: ALL FASTENERS (NAILS, BOLTS, SCREWS & WASHERS) SHALL BE HOT DIPPED GALVANIZED OR STAINLESS STEEL

TYPICAL STAIR TO LANDING DETAIL

SCALE: 3/4"=1'-0"

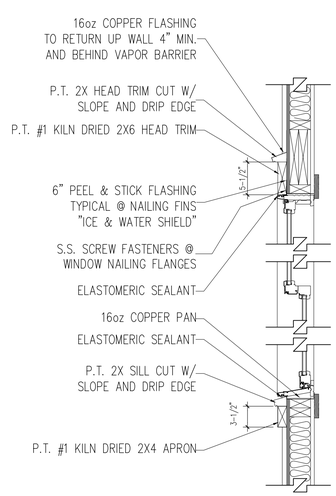

TYPICAL DETAIL AT WINDOW HEAD & SILL

SCALE: 1"=1'-0"

IT IS THE RESPONSIBILITY OF THE CONTRACTOR TO VERIFY, CHECK, AND COORDINATE ALL DIMENSIONS AND REQUIRED MINIMUM FLOOR ELEVATIONS AND TO NOTIFY THE DESIGNER OF ANY DISCREPANCIES PRIOR TO COMMENCEMENT OF CONSTRUCTION. THE DESIGNER ASSUMES NO LIABILITY WHATSOEVER FROM ANY DAMAGES, INJURIES, DEATHS, LEGAL FEES OR LAWSUITS OF ANY KIND THAT MAY ARISE OR RESULT FROM THE EXECUTION OF THE DESIGN OR PERFORMANCE OF WORK WHICH IS NOT IN ACCORDANCE WITH THESE DRAWINGS. IT IS THE RESPONSIBILITY OF THE CONTRACTOR TO COORDINATE ALL CONDITIONS PRESENT BY THESE DRAWINGS WITH ALL GOVERNING BUILDING / CONSTRUCTION CODES PERTAINING TO THE EXECUTION OF THE DESIGN.

TYPICAL DETAILS

GUSCIO RESIDENCE
Parcel 161D
#75 Bridge Street
Bluffton Township, Beaufort County, SC

REVISION	DATE

SHEET #

A7

FILE # JG20-02.DWG
DATE 09.01.20

Attachment 4

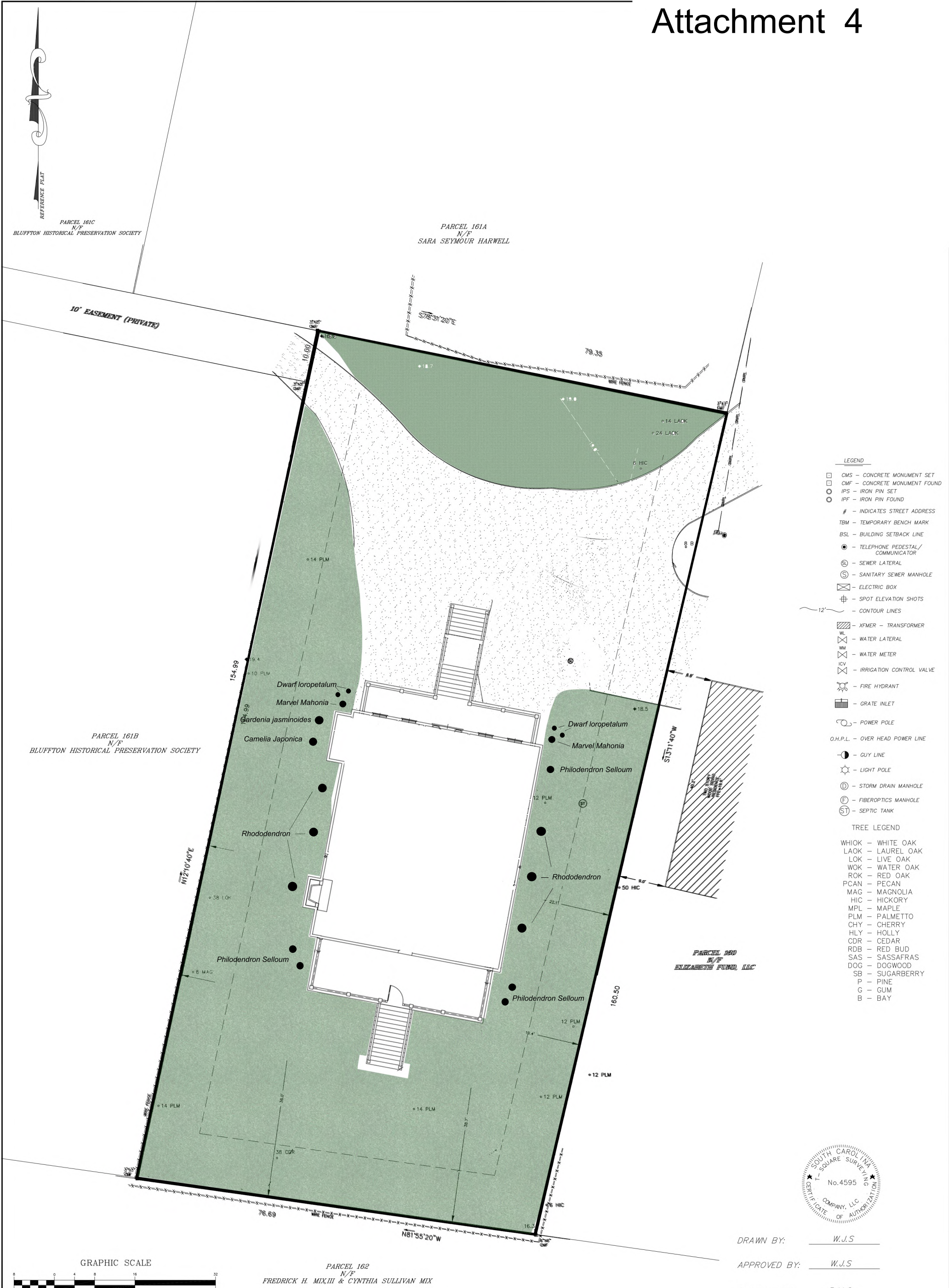

LEGEND

- CMS – CONCRETE MONUMENT SET
- CMF – CONCRETE MONUMENT FOUND
- IPS – IRON PIN SET
- IPF – IRON PIN FOUND
- # – INDICATES STREET ADDRESS
- TBM – TEMPORARY BENCH MARK
- BSL – BUILDING SETBACK LINE
- TELEPHONE PEDESTAL/ COMMUNICATOR
- SL – SEWER LATERAL
- S – SANITARY SEWER MANHOLE
- ELECTRIC BOX
- SPOT ELEVATION SHOTS
- 12' – CONTOUR LINES
- XFMER – TRANSFORMER
- WL – WATER LATERAL
- WM – WATER METER
- ICV – IRRIGATION CONTROL VALVE
- FIRE HYDRANT
- GRATE INLET
- POWER POLE
- O.H.P.L. – OVER HEAD POWER LINE
- GUY LINE
- LIGHT POLE
- D – STORM DRAIN MANHOLE
- F – FIBEROPTICS MANHOLE
- ST – SEPTIC TANK

TREE LEGEND

WHIOK	WHITE OAK
LAOK	LAUREL OAK
LOK	LIVE OAK
WOK	WATER OAK
ROK	RED OAK
PCAN	PECAN
MAG	MAGNOLIA
HIC	HICKORY
MPL	MAPLE
PLM	PALMETTO
CHY	CHERRY
HLY	HOLLY
CDR	CEDAR
RDB	RED BUD
SAS	SASSAFRAS
DOG	DOGWOOD
SB	SUGARBERRY
P	PINE
G	GUM
B	BAY

SOUTH CAROLINA T-SQUARE SURVEYING COMPANY, LLC No.4595 CERTIFICATE OF AUTHORIZATION

DRAWN BY: W.J.S

APPROVED BY: W.J.S

PARTY CHIEF: B.M.S

DATE: AUGUST 26, 2016

T SQUARE SURVEYING
PROFESSIONAL LAND SURVEYORS
P.O. Drawer 330
139 Burnt Church Road
Bluffton, S.C. 29910
tsquare@hargray.com
Phone 843-757-2650 Fax 843-757-5758

JOB No. 16-354AT

STATE OF SOUTH CAROLINA REGISTERED LAND SURVEYOR No.26960 WILLIAM J. SMITH

I HEREBY STATE TO THE BEST OF MY KNOWLEDGE, INFORMATION & BELIEF, THE SURVEY SHOWN HEREON WAS MADE IN ACCORDANCE WITH THE REQUIREMENTS OF THE MINIMUM STANDARDS MANUAL FOR THE PRACTICE OF LAND SURVEYING IN SOUTH CAROLINA, AND MEETS OR EXCEEDS THE REQUIREMENTS FOR A CLASS A SURVEY AS SPECIFIED THEREIN.

WILLIAM J. SMITH, PLS # 26960

THE ABOVE PLAT PREPARED BY ME AT THE REQUEST OF

ELIZABETH FUND, LLC

AN AS-BUILT, TREE & TOPOGRAPHIC SURVEY OF PARCEL 161D BRIDGE STREET, DISTRICT 610, TAX MAP 39A, TOWN OF BLUFFTON, BEAUFORT COUNTY, SOUTH CAROLINA.

DIST. 610, MAP 39A, PARCEL 161D

Notes:

1. According To FEMA Flood Insurance Rate Map # 450251 0001 A This Lot Appears To Lie In A Federal Flood Plain Zone C, Minimum Required Elevation N/A Ft. NGVD29.
2. This Property May Be Subject To Easements, Protective Covenants And Other Facts That May Be Revealed By A Complete Title Search.
3. This Survey Was Performed Without The Benefit Of A Wetland Delineation.
4. All Building Setback Requirements Should Be Verified With The Proper Authorities Prior To Design And Construction.

Reference Plat(s):
A PLAT BY CARL E. EKHOLM, PREPARED FOR THE ESTATE OF JULIA COLCOCK, DATED 6/1/1979.

Attachment 4

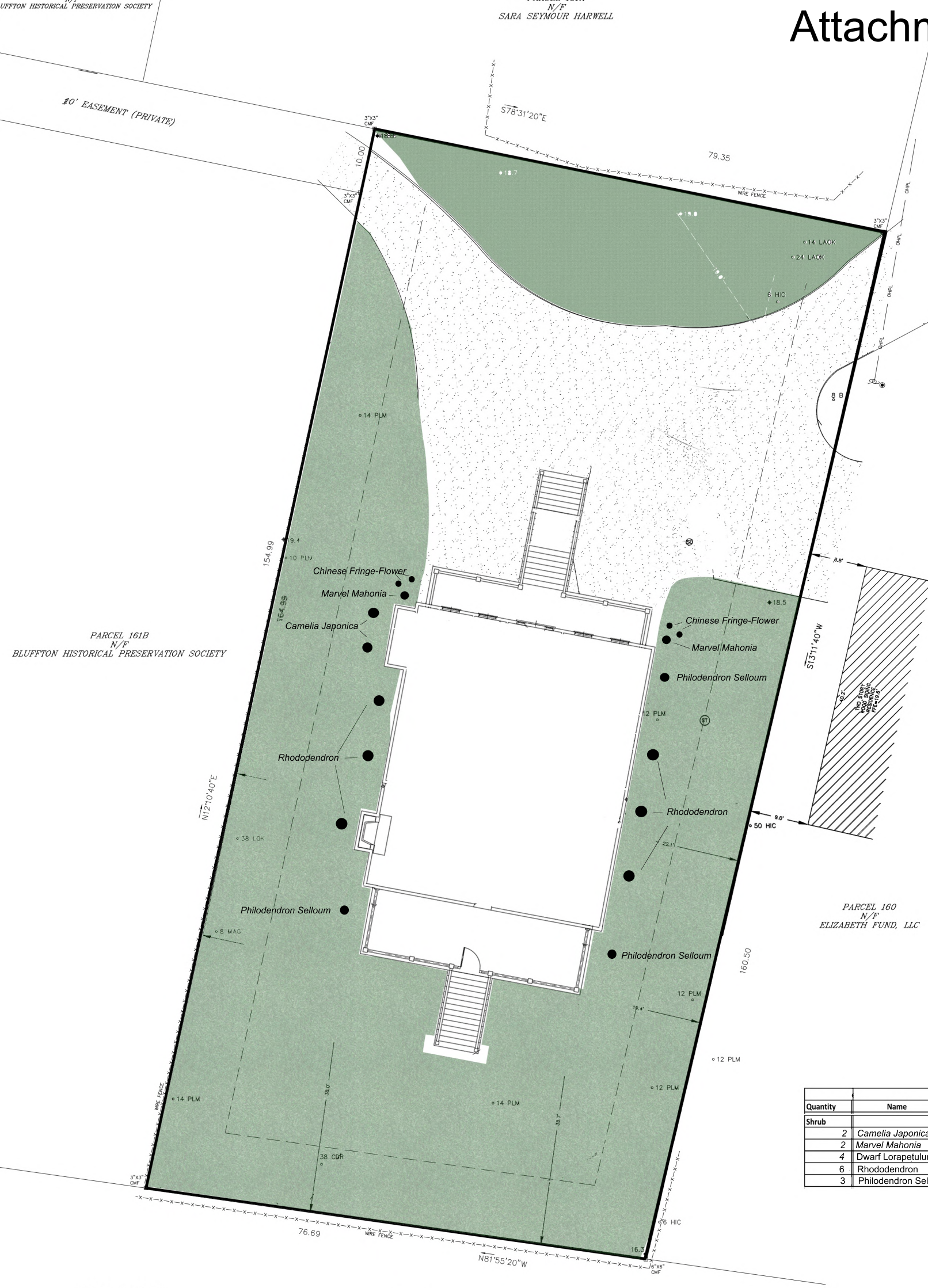

Quantity	Name	Mat. Height	Mat. Spread	Container
Shrub				
2	*Camelia Japonica*	12'	10'	15 gal.
2	*Marvel Mahonia*	6' -8'	4'	7 gal.
4	Dwarf Lorapetulum	2-3'	3-4'	7 gal.
6	Rhododendron	6-8'	6-8'	7 gal.
3	Philodendron Selloum	6-10'	6-8'	7 gal

Attachment 4

Attachment 5

PLAN REVIEW COMMENTS FOR COFA-07-20-014386

Town of Bluffton
Department of Growth Management
20 Bridge Street P.O. Box 386 Bluffton, South Carolina 29910
Telephone 843-706-4522

Plan Type:	**Historic District**	**Apply Date:**	**07/13/2020**
Plan Status:	**Active**	**Plan Address:**	**75 Bridge St BLUFFTON, SC 29910**
Case Manager:	**Katie Peterson**	**Plan PIN #:**	**R610 039 00A 161D 0000**
Plan Description:	**A request by James Guscio, for review of a Certificate of Appropriateness to allow the construction of a new 2.5-story single-family building of approximately 2,310 SF located at 75 Bridge Street in the Old Town Bluffton Historic District and zoned Neighborhood Conservation-HD.**		

Staff Review (HD)

Submission #: 1 Recieved: 07/27/2020 Completed: 07/31/2020

Reviewing Dept.	*Complete Date*	*Reviewer*	*Status*
Growth Management Dept Review (HD)	07/31/2020	Katie Peterson	Approved with Conditions

Comments:

1. In keeping with masonry building technology, metal spark arrestors, exposed metal flues, or pre-fabricated chimney caps are not permitted. The metal chimney cap must be revised to a permitted material.
2. Roof shingles are permitted to be metal or asphalt "dimensional" type, slate, or composite slate. The plans show fiberglass architectural shingles and must be revised to a permitted matierial. (UDO Section 5.15.6.J.)
3. The front build-to for a Center Hall House within the Neighborhood Conservation Historic District-HD is 20'-35'. The site plan shows the structure to be placed approximately 45' from the front property line. The site must be reconfigured with the building moved towards Bridge Street to meet the front build-to requirement.

HPRC Review	07/31/2020	Katie Peterson	Approved with Conditions

Comments:

1. Skirting and Underpinning may be Brick lattice, vertical or horizontal pattern wood lattice, fencing referred to as "pig board" or louvered vents. The material under the front porch is not provided. At time of final submittal, provide additional information on underpinning material. (UDO Section 5.15.6.G.)
2. Residential uses in the -HD zoning districts are required a minimum of 2 parking spaces per dwelling unit. In no case shall parking be located in front of a building. Provide proposed driveway and parking location on the site plan for review at time of final submittal. (UDO Section 5.15.7.)
3. While shutters are not required, when they are proposed they must be applied in a consistent manner. Shutters are currently shown on the front elevation only and must be added to all windows that can accept them or removed from the front elevation. (UDO Section 5.15.6.A. and Section 5.15.5.F.4.c.)
4. For the final application provide a landscape plan noting foundation plantings, street tree locations, and canopy calculations; as well provide architectural details of the railing and baluster, shutter configuration and shutter dog profile, a typical window detail, corner board/pilaster trim detail and sections through the eave and wall depicting the material configuration and dimensions. (Applications Manual)

Watershed Management Review	07/27/2020	William Baugher	Approved with Conditions

Comments:

1. Small Construction Activities, The Town will require a Stormwater Affidavit with a SC DHEC NOI form D-0451 and implementation of the Construction Site BMPs found in Chapter 9 of the Stormwater Design Manual and the SCDHEC Erosion and Sediment Reduction standards and other Stormwater Management regulations, where applicable before Building Permits will be issued.

Addressing Review	07/31/2020	Nick Walton	Approved

Comments:

1. Does this need a new address or using existing address?

Beaufort Jasper Water and Sewer Review	07/31/2020	James Clardy	Approved

Comments:

1. No Comment.

Transportation Department Review - HD	07/31/2020	William Howard	Approved

Comments:

1. See HPRC review for driveway and parking comments.

Plan Review Case Notes: